VAIA Touchfree Lavatory Touchfree Faucet without drain - Chrome

VAIA

44 521 809 Product version from 4/1/2025



- Infrared sensor technology
- 6-5/8" Projection
- Total height 12"
- Height to aerator/spout outlet 8-3/4"
- 1-3/8" hole diameter
- Rigid spout
- Water flow rate limited to max. 0.5 gpm
- Laminar stream
- Thermal disinfection
- Automatic shut-off after 30 seconds
- Indirect temperature control (undercounter)
- Control box included
- Adjustable sensor detection range
- Battery or plug-in power supply operated (batteries not included)
- 4x AA (1.5V) batteries required
- lead-free
- 1x 3/8" flexible supply line
- This product can help a building meet the requirements of Green Building Rating Systems, e.g. LEED®, BREEAM®, DGNB

Batteries not included

NOTE: A tempering device is recommended for installation in public areas. Please refer to your local building codes.

Chrome	44 521 809-00 0010
Brushed Platinum	44 521 809-06 0010
Platinum	44 521 809-08 0010
Dark Chrome	44 521 809-19 0010
Brushed Durabrass (23kt Gold)	44 521 809-28 0010
Matte Black	44 521 809-33 0010
Brushed Dark Brass (PVD)	44 521 809-39 0010
Brushed Bronze (PVD)	44 521 809-42 0010
Brushed Dark Bronze (PVD)	44 521 809-43 0010
Brushed Champagne (22kt Gold)	44 521 809-46 0010
Champagne (22kt Gold)	44 521 809-47 0010
Brushed Chrome	44 521 809-93 0010
Brushed Dark Platinum	44 521 809-99 0010

DORN BRACHT

VAIA Touchfree Lavatory Touchfree Faucet without drain - Chrome

44 521 809 Product version from 4/1/2025

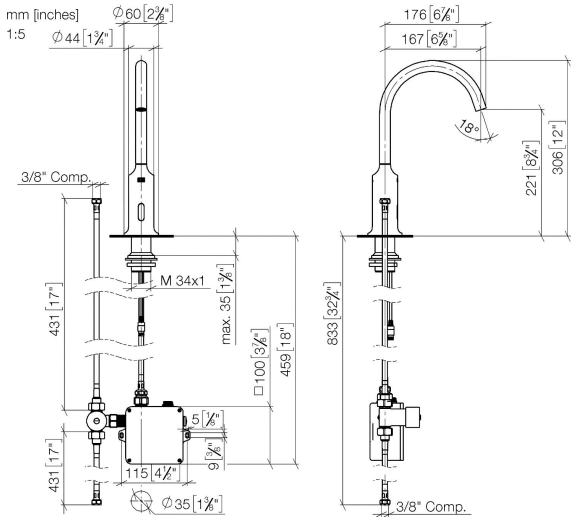

Codes & Standards

ASME A112.18.1	California Energy Commission (CEC)	cUPC	NSF372

Certificates and sustainability

IAPMO_6397	IAPMO_4976 (	EPD-DOR-20230287-IBA1-EN Environmental.product-declarat

DORN BRACHT

VAIA Touchfree Lavatory Touchfree Faucet without drain - Chrome

44 521 809 Product version from 4/1/2025

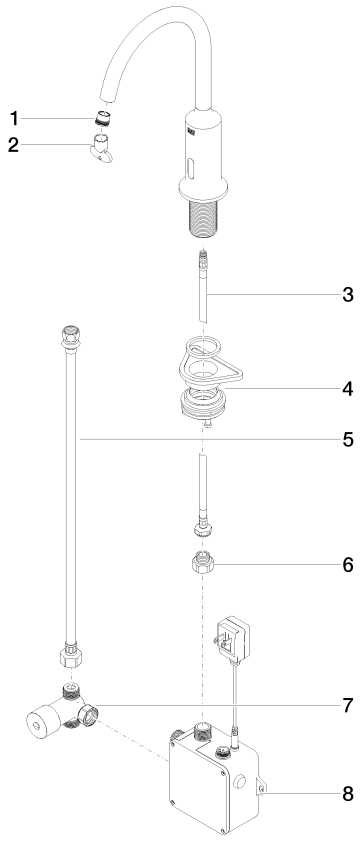

Spare parts list

Number	Item Number	Designation	Number of units	Lead time
8	90 10 01 247 02 90	valve box	1.00	14
1	09 29 03 094 90	aerator	1.00	14
6	09 24 03 185-00	nipple	1.00	26
3	04 30 04 100 00 90	hose	1.00	14
7	90 30 50 081 00 90	valve	1.00	14
4	04 23 10 044 08 90	fixing set	1.00	14
5	12 506 970 90	High pressure hoses -	1.00	14
2	90 30 09 028 00 90	key	1.00	14