DORN BRACHT

Touchfree Lavatory Touchfree Faucet without drain - Chrome

SERIES SPECIFIC

44 521 660 Product version from 10/1/2023



Fits: TARA, META

- Infrared sensor technology
- 6-1/2" Projection
- Total height 12-1/4"
- Height to aerator/spout outlet 7-7/8"
- 1-3/8" hole diameter
- Rigid spout
- Water flow rate limited to max. 0.5 gpm
- Laminar stream
- Thermal disinfection
- Automatic shut-off after 30 seconds
- Indirect temperature control (undercounter)
- Control box included
- Adjustable sensor detection range
- Battery or plug-in power supply operated (batteries not included)
- 4x AA (1.5V) batteries required
- lead-free
- 1x 3/8" flexible supply line
- This product can help a building meet the requirements of Green Building Rating Systems, e.g. LEED®, BREEAM®, DGNB

Batteries not included

NOTE: A tempering device is recommended for installation in public areas. Please refer to your local building codes.

Chrome	44 521 660-00 0010
Brushed Platinum	44 521 660-06 0010
Platinum	44 521 660-08 0010
Dark Chrome	44 521 660-19 0010
Light Gold (PVD)	44 521 660-26 0010
Brushed Light Gold (PVD)	44 521 660-27 0010
Brushed Durabrass (23kt Gold)	44 521 660-28 0010
Brushed Gold (PVD)	44 521 660-37 0010
Brushed Dark Brass (PVD)	44 521 660-39 0010
Brushed Bronze (PVD)	44 521 660-42 0010
Brushed Dark Bronze (PVD)	44 521 660-43 0010
Brushed Champagne (22kt Gold)	44 521 660-46 0010
Champagne (22kt Gold)	44 521 660-47 0010
Brushed Chrome	44 521 660-93 0010
Brushed Dark Platinum	44 521 660-99 0010

DORN BRACHT

Touchfree Lavatory Touchfree Faucet without drain - Chrome

SERIES SPECIFIC

44 521 660 Product version from 10/1/2023

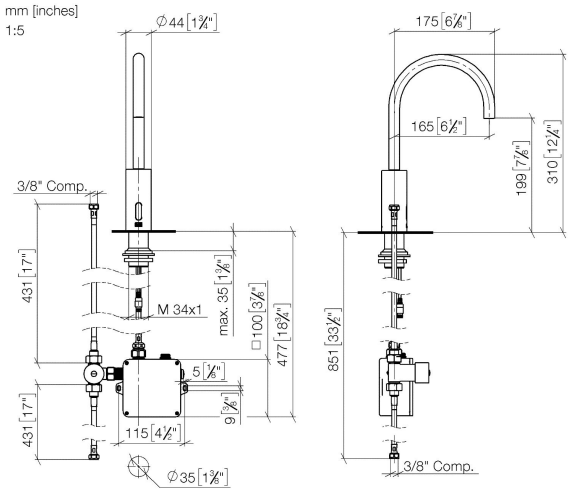

Codes & Standards

ASME A112.18.1	California Energy Commission (CEC)	cUPC	NSF372

Certificates and sustainability

IAPMO_6397	IAPMO_4976 (	EPD-DOR-20230287-IBA1-EN Environmental.product-declarat

DORN BRACHT

Touchfree Lavatory Touchfree Faucet without drain - Chrome

SERIES SPECIFIC

44 521 660 Product version from 10/1/2023

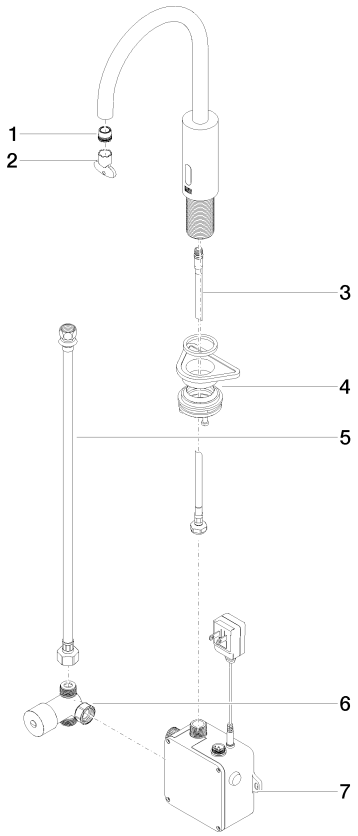

Spare parts list

Number	Item Number	Designation	Number of units	Lead time
7	90 10 01 247 02 90	valve box	1.00	14
1	09 29 03 094 90	aerator	1.00	14
5	12 506 970 90	High pressure hoses -	1.00	14
4	04 23 10 044 08 90	fixing set	1.00	14
6	90 30 50 081 00 90	valve	1.00	14
3	04 30 04 108 00 90	hose	1.00	82
2	90 30 09 028 00 90	key	1.00	14