RAINMOON Rainpanel - Matte White

SERIES-VARIOUS

41 610 979



Fits: TARA, META

- Trim parts
- Rain panel with 2 different spray modes
- AQUACIRCLE RAIN: Circular rain curtain, flow rate max. 1.6 gpm (at 3 bar)
- TEMPEST RAIN: Natural rain, flow rate max. 1.3 gpm (at 3 bar)
- Descaling system

Technical data:

- Outside diameter 48-7/8", opening diameter 17-3/4"
- Weight 50 lbs
- Matt white cover, RAL 9003

Electric:

- Ambient lighting, LED light color approx. 2700 K
- Technology: LED, not dimmable
- Lights protected against splashing
- Observe the regulations concerning protected zones specified in DIN VDE 0100, Part 701 (IEC 60364-7-701).

Environment:

- Not suitable for use in a steam room.
- Not suitable for outdoor use.
- Not suitable for use in chlorinated or salty environments.

Planning tips:

- Light switch not included
- Controls not included in delivery

Notes:

To meet the North American plumbing standards, this application must be installed with a diverter (35 203 970-900010, 3-way diverter rough included and required for more restricted states).
Please refer to Planning Guide for proper sizing and installation methods
Pre-assembly kit for three-way diverter included

To meet the North American plumbing standards, this application must be installed with a diverter (35 203 970-900010, 3-way diverter rough included and required for more restricted states).

Please refer to Planning Guide for proper sizing and installation methods

Pre-assembly kit for three-way diverter included

Required article



RAINMOON Installation rough - 35 610 970-90 0010
●Ceiling installation housing 1356 x 1356 x 290 mm
●Opening diameter 49-1/4"
●Min. rough in depth 11-3/8"
●Rough parts
●Pre-assembly kit for three-way diverter included

DORN BRACHT

RAINMOON Rainpanel - Matte White

SERIES-VARIOUS

41 610 979

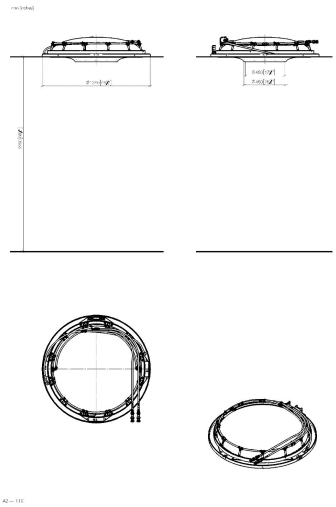

Codes & Standards

California Energy Commission (CEC)

DORN BRACHT

RAINMOON Rainpanel - Matte White

SERIES-VARIOUS

41 610 979

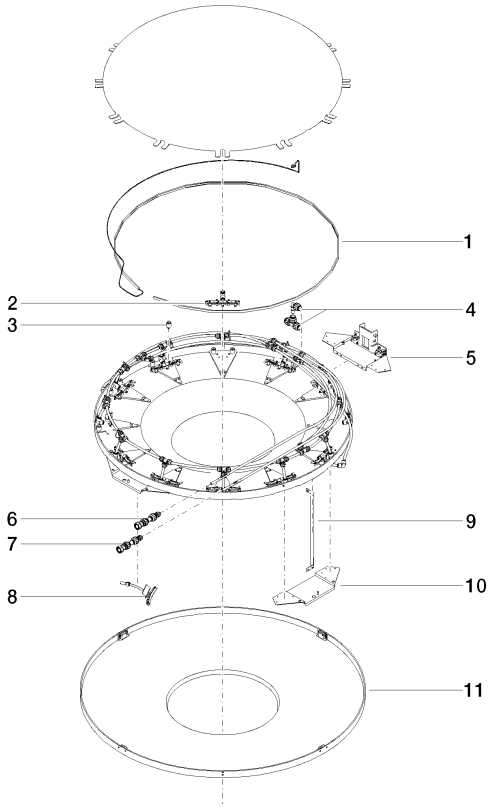

Spare parts list

Number	Item Number	Designation	Number of units	Lead time
1	90 10 01 183 00 90	lamp	1.00	14
9	90 17 20 217 00 90	holder	4.00	14
6	90 24 04 346 01 90	connection AQUACIRCLE	1.00	14
3	90 18 40 222 00 90	adaptor	24.00	14
11	90 11 02 325 00 90	cover	1.00	14
8	90 17 09 057 01 90	jet module	12.00	14
5	90 17 20 211 00 90	joint	1.00	14
2	90 17 09 056 01 90	jet module	12.00	82
4	90 24 04 321 00 90	threaded connector	1.00	14
10	90 17 20 216 00 90	holder	3.00	14
7	90 24 04 346 02 90	connection TEMPEST	1.00	14