3FLACCHCH

Specifications

FLOOR MOUNT TUB FILLER

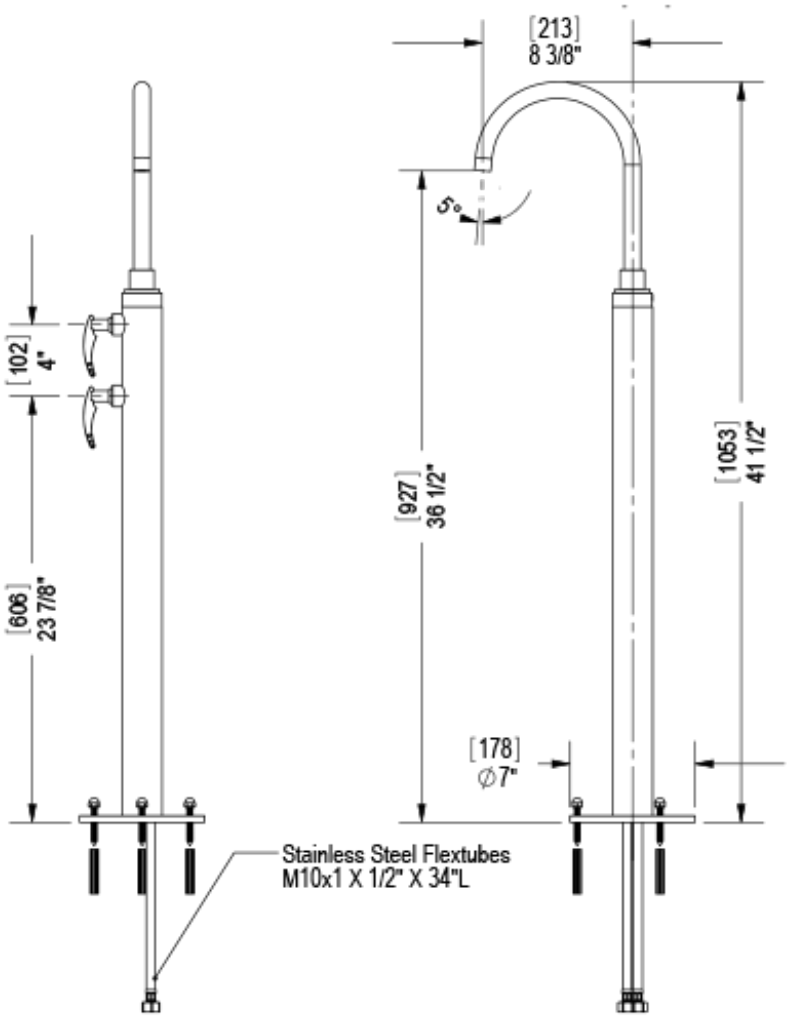

Tel: 905-851-6780
Fax: 905-851-8031
Toll Free: 800-461-5901