META Wall-mounted single-lever mixer without drain - Chrome

META

36 867 660 Product version from 7/1/2023



- 4-7/8" Projection
- Rigid spout
- Round aerated stream
- Spout hole diameter 1-1/2"
- Hole diameter single-lever mixer 2-1/4"
- Mixer with flange Ø 3-1/8"
- 2-1/8" diameter flange for spout
- Water flow rate limited to max. 1.2 gpm
- lead-free
- This product can help a building meet the requirements of Green Building Rating Systems, e.g. LEED®, BREEAM®, DGNB

(ADA)

(ADA)

Chrome	36 867 660-00 0010
Brushed Platinum	36 867 660-06 0010
Light Gold (PVD)	36 867 660-26 0010
Brushed Light Gold (PVD)	36 867 660-27 0010
Matte Black	36 867 660-33 0010
Brushed Gold (PVD)	36 867 660-37 0010
Brushed Dark Brass (PVD)	36 867 660-39 0010
Brushed Bronze (PVD)	36 867 660-42 0010
Brushed Dark Bronze (PVD)	36 867 660-43 0010
Brushed Chrome	36 867 660-93 0010
Brushed Dark Platinum	36 867 660-99 0010

Required article



Rough for wall-mounted faucet - 35 860 970-90 0010
- Min. rough in depth 3"
- Max. rough in depth 3-3/4"
- Rough can be rotated to position the lever on top or to the left of the spout.

META Wall-mounted single-lever mixer without drain - Chrome

36 867 660 Product version from 7/1/2023

mm [inches]

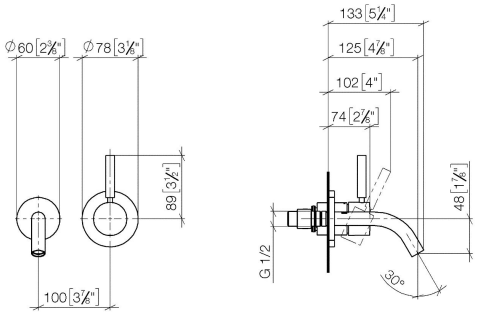

Codes & Standards

ADA	ASME A112.18.1	California Energy Commission (CEC)	cUPC	
EPA WaterSense	NSF372	NSF61	WaterSense	

Certificates and sustainability

IAPMO_N-4976	IAPMO_6397	IAPMO_4976 (	EPD-DOR-20230287 -IBA1-EN Environmental.product-declarat	IAPMO_8834

META Wall-mounted single-lever mixer without drain - Chrome

36 867 660 Product version from 7/1/2023

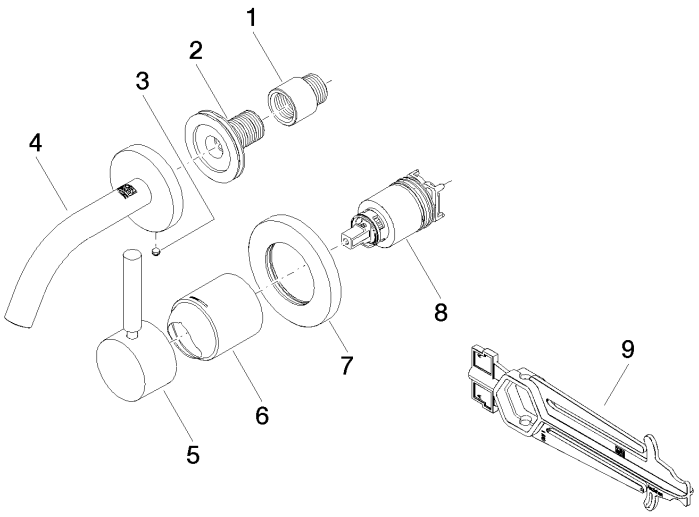

Spare parts list

Number	Item Number	Designation	Number of units	Lead time
2	90 24 03 280 00 90	nipple	1.00	14
6	09 11 02 288-00	cover	1.00	26
4	90 28 22 363 00-00	spout	1.00	26
7	90 27 62 011 00-00	rosette	1.00	26
3	09 31 11 148 90	pin	1.00	14
5	90 20 66 007 00-00	handle	1.00	26
1	09 24 03 072 10 90	nipple	1.00	14
8	90 15 05 064 01 90	cartridge	1.00	14
9	90 30 09 064 00 90	key	1.00	14