COYA Wall-mounted single-lever mixer without drain - Chrome

COYA

36 860 404 Product version from 1/1/2026



- 7-1/2" Projection
- Rigid spout
- Round aerated stream
- Spout hole diameter 1-1/2"
- Hole diameter single-lever mixer 2-1/4"
- 2-3/8" x 2-3/8" flange for spout
- Flange for mixer 3-1/8" x 3-1/8"
- Water flow rate limited to max. 1.2 gpm
- lead-free
- This product can help a building meet the requirements of Green Building Rating Systems, e.g. LEED®, BREEAM®, DGNB

(ADA)

(ADA)

Chrome	36 860 404-00
Brushed Platinum	36 860 404-06
Dark Chrome	36 860 404-19
Brushed Durabrass (23kt Gold)	36 860 404-28
Brushed Dark Brass (PVD)	36 860 404-39
Brushed Bronze (PVD)	36 860 404-42
Brushed Dark Bronze (PVD)	36 860 404-43
Brushed Champagne (22kt Gold)	36 860 404-46
Champagne (22kt Gold)	36 860 404-47
Brushed Dark Platinum	36 860 404-99

Required article



Rough for wall-mounted faucet - 35 860 970-90 0010
●Min. rough in depth 3"
●Rough can be rotated to position the lever on top or to the left of the spout.
●Max. rough in depth 3-3/4"

COYA Wall-mounted single-lever mixer without drain - Chrome

COYA

36 860 404 Product version from 1/1/2026

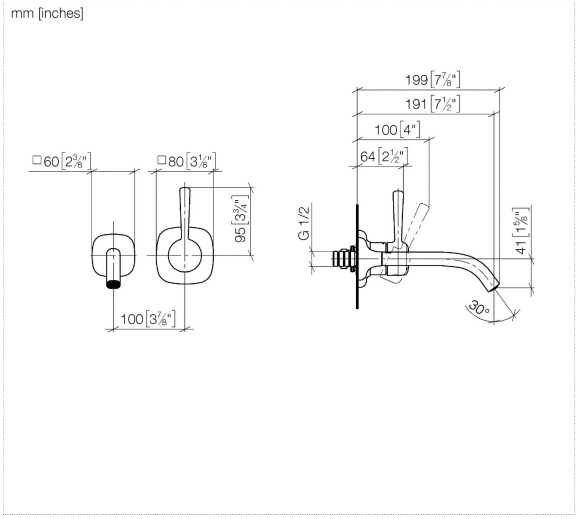

Flow rate chart

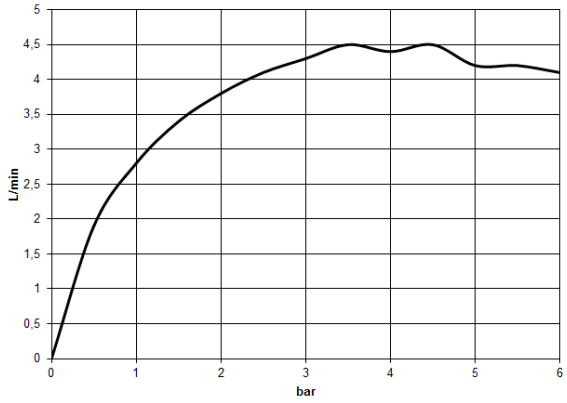

Codes & Standards

ASME A112.18.1	cUPC	DIN 4109	EPA WaterSense
ISO 3822	NSF372	NSF61	Ü-Zeichen
WaterSense			

Certificates and sustainability

LGA_29	IAPMO_N-4976	IAPMO_6397	EPD-DOR-20230287 -IBA1-EN Environmental.product-declarat	IAPMO_4976 (
IAPMO_8834				

DORN BRACHT

COYA Wall-mounted single-lever mixer without drain - Chrome

36 860 404 Product version from 1/1/2026

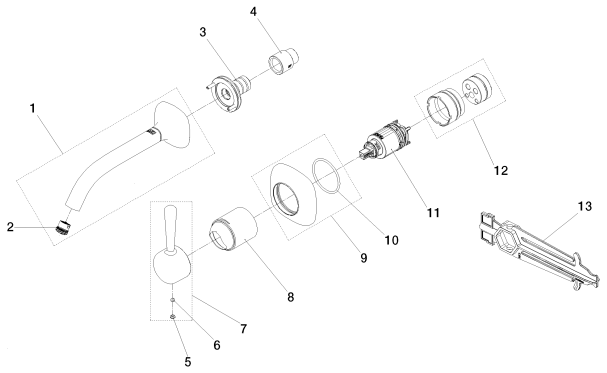

Spare parts list

Number	Item Number	Designation	Number of units	Lead time
9	90 27 40 006 00-00	rosette	1.00	26
5	90 31 20 087 00-00	plug	1.00	26
10	90 14 10 049 00 90	seal	1.00	14
3	90 24 03 280 00 90	nipple	1.00	14
4	09 24 03 072 10 90	nipple	1.00	14
11	90 15 05 064 01 90	cartridge	1.00	14
7	90 20 40 004 00-00	handle	1.00	26
6	90 31 11 063 00 90	pin	1.00	14
2	09 29 03 125 90	aerator	1.00	14
13	90 30 09 064 00 90	key	1.00	14
12	90 30 11 282 00 90	extension	1.00	14
8	09 11 02 288-00	cover	1.00	26
1	90 28 22 456 00-00	spout	1.00	26

Model/program/technical modifications and error excepted
For more information see: www.dornbracht.com + 49 (0) 2371 8899 900 mail@dornbracht.com