COYA Wall-mounted three-hole lavatory mixer without drain - Chrome

COYA

36 712 404 Product version from 1/1/2026



- 7-1/2" Projection
- Rigid spout
- Round aerated stream
- Spout hole diameter 1-3/8"
- Valve hole diameter 1-3/8"
- Flange 2-3/8" x 2-3/8"
- Water flow rate limited to max. 1.2 gpm
- lead-free
- This product can help a building meet the requirements of Green Building Rating Systems, e.g. LEED®, BREEAM®, DGNB

Chrome	36 712 404-00
Brushed Platinum	36 712 404-06
Dark Chrome	36 712 404-19
Brushed Durabrass (23kt Gold)	36 712 404-28
Brushed Dark Brass (PVD)	36 712 404-39
Brushed Bronze (PVD)	36 712 404-42
Brushed Dark Bronze (PVD)	36 712 404-43
Brushed Champagne (22kt Gold)	36 712 404-46
Champagne (22kt Gold)	36 712 404-47
Brushed Dark Platinum	36 712 404-99

COYA Wall-mounted three-hole lavatory mixer without drain - Chrome

COYA

36 712 404 Product version from 1/1/2026

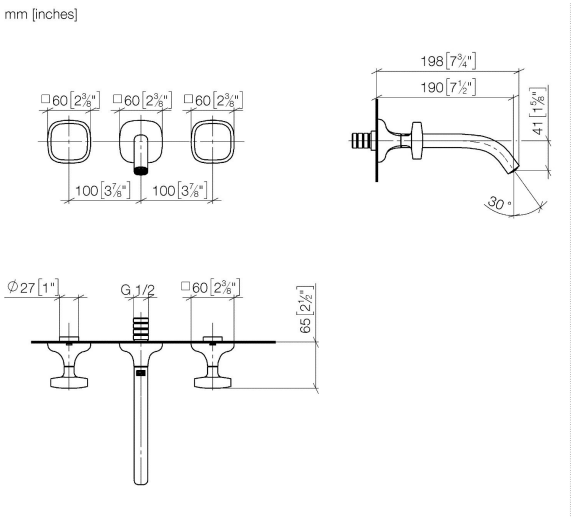

Flow rate chart

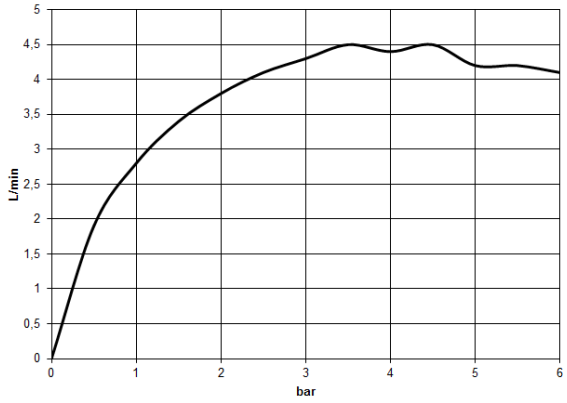

Codes & Standards

ASME A112.18.1	cUPC	DIN 4109	EPA WaterSense
ISO 3822	NSF372	NSF61	Ü-Zeichen
WaterSense			

Certificates and sustainability

IAPMO_N-4976	IAPMO_6397	EPD-DOR-20230287 -IBA1-EN Environmental.product-declarat	LGA_39 IAPMO_4976 (
IAPMO_8834			

DORN BRACHT

COYA Wall-mounted three-hole lavatory mixer without drain - Chrome

36 712 404 Product version from 1/1/2026

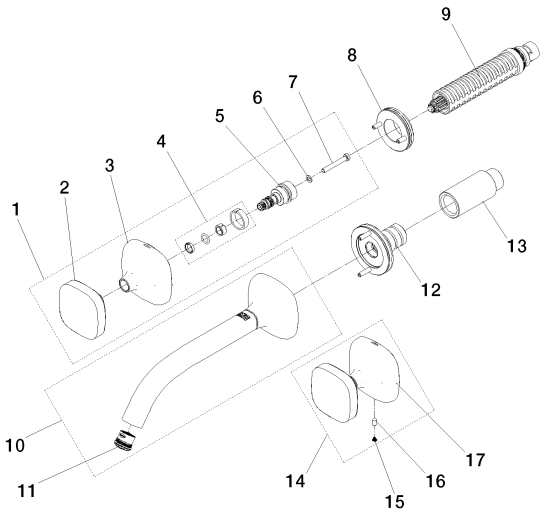

Spare parts list

Number	Item Number	Designation	Number of units	Lead time
10	90 28 22 456 00-00	spout	1.00	26
1	90 20 40 003 05-00	handle (hot)	1.00	26
12	90 24 03 280 00 90	nipple	1.00	14
4	90 14 15 028 00 90	ring	2.00	14
8	90 21 02 108 00 90	disc	2.00	14
9	90 90 03 157 00 90	top	2.00	14
15	90 31 11 118 00 90	set	1.00	14
11	09 29 03 125 90	aerator	1.00	14
7	09 30 30 158 90	screw	2.00	14
3	90 27 40 004 01-00	rosette	1.00	26
2	90 20 40 003 02-00	handle	2.00	26
5	90 29 06 119 00 90	spindle	2.00	14
6	09 30 11 194 90	disc	2.00	14
14	90 20 40 003 06-00	handle (cold)	1.00	26
13	09 24 03 081 10 90	extension	1.00	14
17	90 27 40 005 00-00	rosette	1.00	26
16	09 31 11 048 90	pin	2.00	14