VAIA Volume Control clockwise-closing 3/4" - Chrome

VAIA

36 608 809 Product version from 4/1/2025



- Flange diameter 2-3/8"
- Ceramic disc cartridge

(ADA)

(ADA)

	Chrome	36 608 809-00
	Brushed Platinum	36 608 809-06
	Platinum	36 608 809-08
	Dark Chrome	36 608 809-19
	Brushed Durabrass (23kt Gold)	36 608 809-28
	Brushed Dark Brass (PVD)	36 608 809-39
	Brushed Bronze (PVD)	36 608 809-42
	Brushed Dark Bronze (PVD)	36 608 809-43
	Brushed Champagne (22kt Gold)	36 608 809-46
	Champagne (22kt Gold)	36 608 809-47
	Brushed Dark Platinum	36 608 809-99

Required article

	**Rough for volume control 3/4" -** ●Max. rough in depth 5-1/2" ●Min. rough in depth 3-1/8"	35 608 970-90 0010

VAIA Volume Control clockwise-closing 3/4" - Chrome

36 608 809 Product version from 4/1/2025

mm [inches]

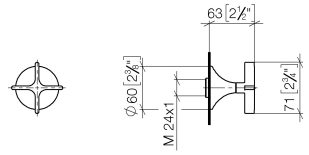

Flow rate chart

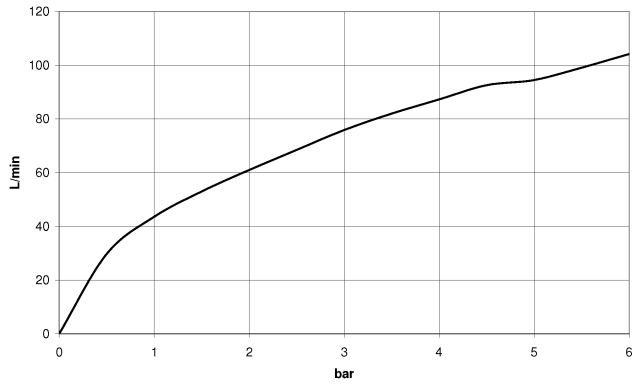

Codes & Standards

ADA	ASME A112.18.1	cUPC	Scottish Water Byelaws
UK Water Supply Regulations			

Certificates and sustainability

IAPMO_4976 (	EPD-DOR-20230287 WRAS_260502 -IBA1-EN Environmental.product-declarat

VAIA Volume Control clockwise-closing 3/4" - Chrome

36 608 809 Product version from 4/1/2025

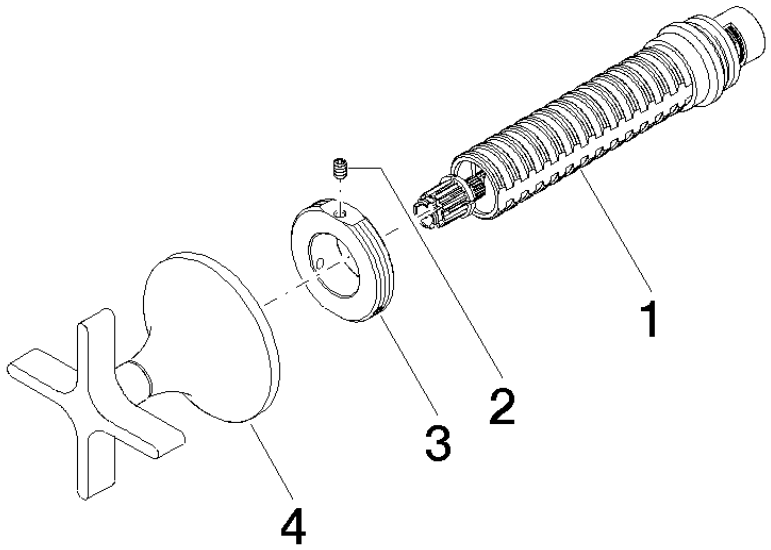

Spare parts list

Number	Item Number	Designation	Number of units	Lead time
3	09 21 02 163 90	disc	1.00	14
4	90 20 80 014 00-00	handle	1.00	26
2	09 31 11 008 90	pin	1.00	14
1	90 90 03 127 00 90	top	1.00	14