DORN BRACHT

VAIA Volume Control clockwise-closing 1/2" - Chrome

VAIA

36 607 809 Product version from 4/1/2025



- Flange diameter 2-3/8"
- Ceramic disc cartridge

(ADA)

(ADA)

Chrome	36 607 809-00
Brushed Platinum	36 607 809-06
Platinum	36 607 809-08
Dark Chrome	36 607 809-19
Brushed Durabrass (23kt Gold)	36 607 809-28
Brushed Dark Brass (PVD)	36 607 809-39
Brushed Bronze (PVD)	36 607 809-42
Brushed Dark Bronze (PVD)	36 607 809-43
Brushed Champagne (22kt Gold)	36 607 809-46
Champagne (22kt Gold)	36 607 809-47
Brushed Dark Platinum	36 607 809-99

Required article



Rough for volume control 1/2" -
●Max. rough in depth 5-1/2"
●Min. rough in depth 3-1/8"

35 607 970-90 0010

VAIA Volume Control clockwise-closing 1/2" - Chrome

36 607 809 Product version from 4/1/2025

mm [inches]

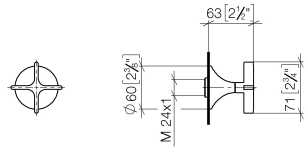

Flow rate chart

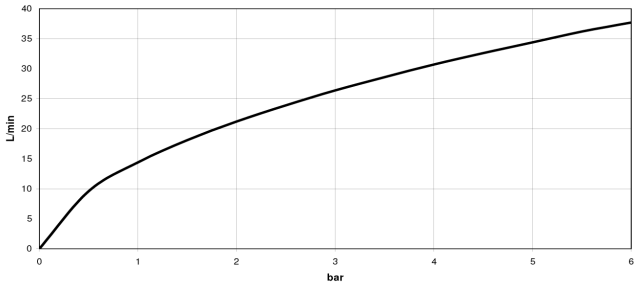

Codes & Standards

ADA	ASME A112.18.1	cUPC	DIN 4109
EN 1111	EN 200	ISO 3822	Scottish Water Byelaws
UK Water Supply Regulations	Ü-Zeichen		

VAIA Volume Control clockwise-closing 1/2" - Chrome

36 607 809 Product version from 4/1/2025

Certificates and sustainability

DVGW_DW-6501DN0	LGA_29	DVGW_DW-6512DN0	LGA_29	IAPMO_4976 (
EPD-DOR-20230287-IBA1-EN Environmental.product-declarat	WRAS_260502	WRAS_260602		

VAIA Volume Control clockwise-closing 1/2" - Chrome

36 607 809 Product version from 4/1/2025

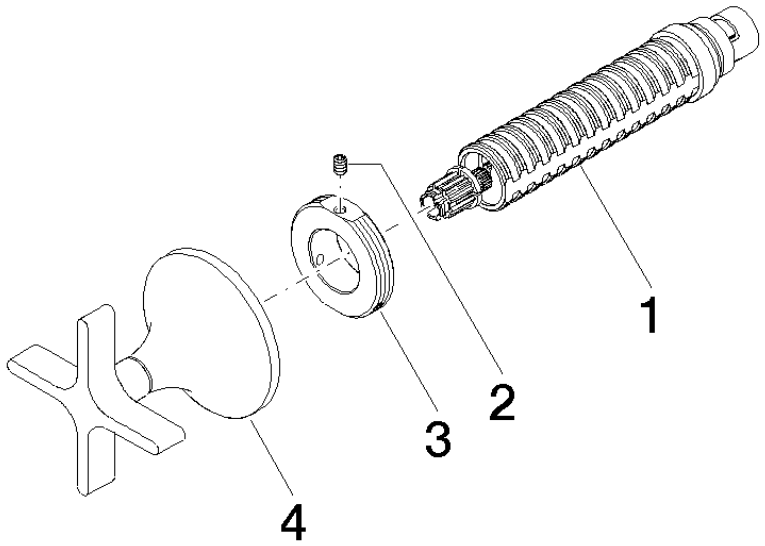

Spare parts list

Number	Item Number	Designation	Number of units	Lead time
2	09 31 11 008 90	pin	1.00	14
3	09 21 02 163 90	disc	1.00	14
1	90 90 03 143 00 90	top	1.00	14
4	90 20 80 014 00-00	handle	1.00	26