VAIA xTOOL Concealed thermostat - Chrome

VAIA

36 416 809 Product version from 4/1/2025



- Cover plate Ø 4-7/8"
- Temperature control handle with safety lock at 100 °F/ 38°C
  (ADA)

(ADA)

Chrome	36 416 809-00
Brushed Platinum	36 416 809-06
Platinum	36 416 809-08
Dark Chrome	36 416 809-19
Brushed Durabrass (23kt Gold)	36 416 809-28
Brushed Dark Brass (PVD)	36 416 809-39
Brushed Bronze (PVD)	36 416 809-42
Brushed Dark Bronze (PVD)	36 416 809-43
Brushed Champagne (22kt Gold)	36 416 809-46
Champagne (22kt Gold)	36 416 809-47
Brushed Dark Platinum	36 416 809-99

Required article



xTOOL Concealed thermostat rough - 35 517 970-90 0010
- Max. rough in depth 6-1/8"
- Min. rough in depth 4"

DORN BRACHT

VAIA xTOOL Concealed thermostat - Chrome

36 416 809 Product version from 4/1/2025

mm [inches]

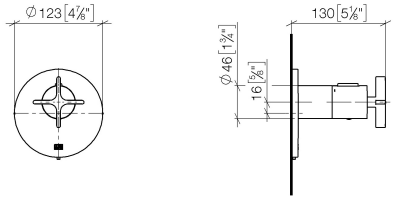

Codes & Standards

ADA

Certificates and sustainability

EPD-DOR-20230287
-IBA1-EN
Environmental.prod
uct-declarat

DORN BRACHT

VAIA xTOOL Concealed thermostat - Chrome

36 416 809 Product version from 4/1/2025

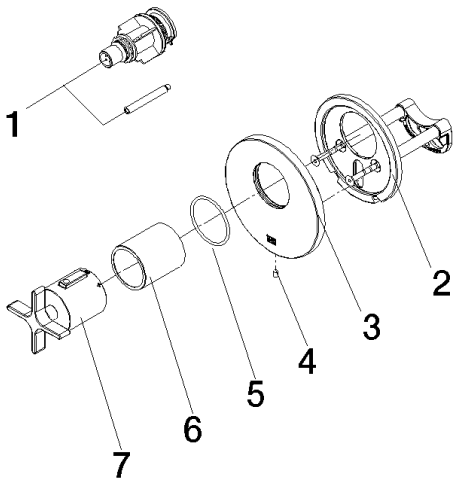

Spare parts list

Number	Item Number	Designation	Number of units	Lead time
2	90 11 01 196 00 90	base	1.00	14
4	09 31 11 048 90	pin	1.00	14
7	90 17 33 029 00-00	handle	1.00	26
3	09 11 02 537-00	cover	1.00	82
1	12 178 970 90	Extension 1-3/4" -	1.00	14
6	90 21 02 112 00-00	sleeve	1.00	26
5	90 14 10 049 00 90	seal	1.00	14