COYA xTOOL Concealed thermostat - Brushed Platinum

COYA

36 416 404 Product version from 1/1/2026



- Cover plate 4-7/8" x 4-7/8"
- Temperature control handle with safety lock at 100 °F/ 38°C

Brushed Platinum	36 416 404-06
Chrome	36 416 404-00
Dark Chrome	36 416 404-19
Brushed Durabrass (23kt Gold)	36 416 404-28
Brushed Dark Brass (PVD)	36 416 404-39
Brushed Bronze (PVD)	36 416 404-42
Brushed Dark Bronze (PVD)	36 416 404-43
Brushed Champagne (22kt Gold)	36 416 404-46
Champagne (22kt Gold)	36 416 404-47
Brushed Dark Platinum	36 416 404-99

Required article



xTOOL Concealed thermostat rough - 35 517 970-90 0010
- Min. rough in depth 4"
- Max. rough in depth 6-1/8"

Required article



xGRID Installation track 21.85" - 12 360 970 90

Required article



xGRID Mounting bracket for drywall construction - 12 340 970 90

DORN BRACHT

COYA xTOOL Concealed thermostat - Brushed Platinum

COYA

36 416 404 Product version from 1/1/2026

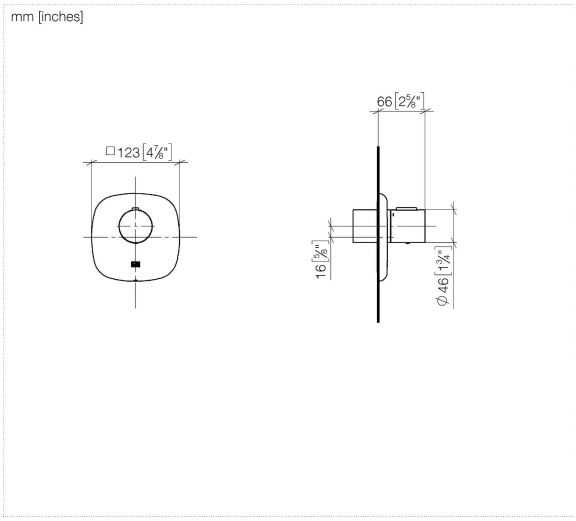

Codes & Standards

ASME A112.18.1 cUPC

Certificates and sustainability

EPD-DOR-20230287 IAPMO_4976 (
-IBA1-EN
Environmental.prod
uct-declarat

COYA xTOOL Concealed thermostat - Brushed Platinum

36 416 404 Product version from 1/1/2026

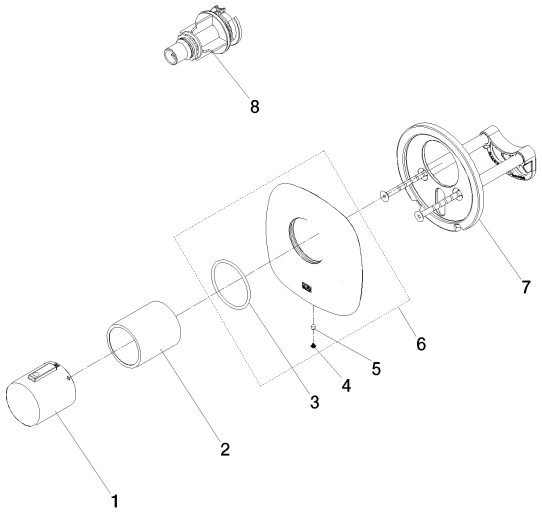

Spare parts list

Number	Item Number	Designation	Number of units	Lead time
2	90 21 02 112 00-06	sleeve	1.00	26
3	90 14 10 049 00 90	seal	1.00	14
6	90 11 02 181 00-06	plate	1.00	26
4	90 31 11 117 00 90	plug	1.00	14
1	90 17 33 020 00-06	handle	1.00	26
5	09 31 11 294 90	pin	1.00	14
8	12 178 970 90	Extension 1-3/4" -	1.00	14
7	90 11 01 196 00 90	base	1.00	14