Volume Control clockwise-closing 1/2"

COYA

36 310 424 Product version from 1/1/2026



- Flange 2-3/8" x 2-3/8"

Chrome	36 310 424-00
Brushed Platinum	36 310 424-06
Dark Chrome	36 310 424-19
Brushed Durabrass (23kt Gold)	36 310 424-28
Brushed Dark Brass (PVD)	36 310 424-39
Brushed Bronze (PVD)	36 310 424-42
Brushed Dark Bronze (PVD)	36 310 424-43
Brushed Champagne (22kt Gold)	36 310 424-46
Champagne (22kt Gold)	36 310 424-47
Brushed Dark Platinum	36 310 424-99

Required article



Rough for volume control clockwise-closing 1/2" - 35 621 970-90 0010
- Min. rough in depth 2-1/2"
- Max. rough in depth 4-7/8"

DORN BRACHT

Volume Control clockwise-closing 1/2"

COYA

36 310 424 Product version from 1/1/2026

mm [inches]



Certificates and sustainability

EPD-DOR-20230287
-IBA1-EN
Environmental.prod
uct-declarat

DORN BRACHT

Volume Control clockwise-closing 1/2"

COYA

36 310 424 Product version from 1/1/2026

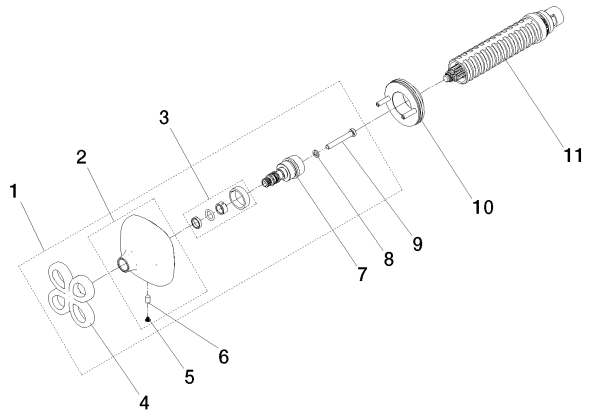

Spare parts list

Number	Item Number	Designation	Number of units	Lead time
10	90 21 02 108 00 90	disc	1.00	14
11	90 90 03 142 00 90	top	1.00	14
6	09 31 11 048 90	pin	1.00	14
8	09 30 11 194 90	disc	1.00	14
1	90 20 40 010 07-00	handle	1.00	26
7	90 29 06 119 00 90	spindle	1.00	14
4	90 20 40 010 00-00	handle	1.00	26
9	09 30 30 158 90	screw	1.00	14
5	90 31 11 117 00 90	plug	1.00	14
3	90 14 15 028 00 90	ring	1.00	14
2	90 27 40 019 00-00	rosette	1.00	26