COYA Wall mounted two-way diverter - Chrome

COYA

36 200 414 Product version from 1/1/2026



- Manual diverter
- Flange 3-1/8" x 3-1/8"
- with integrated shut-off **(ADA)**

(ADA)

Chrome	36 200 414-00 0010
Brushed Platinum	36 200 414-06 0010
Dark Chrome	36 200 414-19 0010
Brushed Durabrass (23kt Gold)	36 200 414-28 0010
Brushed Dark Brass (PVD)	36 200 414-39 0010
Brushed Bronze (PVD)	36 200 414-42 0010
Brushed Dark Bronze (PVD)	36 200 414-43 0010
Brushed Champagne (22kt Gold)	36 200 414-46 0010
Champagne (22kt Gold)	36 200 414-47 0010
Brushed Dark Platinum	36 200 414-99 0010

Required article

	**Wall mounted two-way diverter -** ●Min. rough in depth 3-3/8" ●Max. rough in depth 5-7/8"	35 202 970-90 0010

DORN BRACHT

COYA Wall mounted two-way diverter - Chrome

36 200 414 Product version from 1/1/2026

mm [inches]

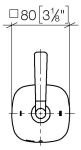

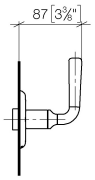

Codes & Standards

ASME A112.18.1	California Energy Commission (CEC)	cUPC

Certificates and sustainability

EPD-DOR-20230287 IAPMO_4976 (
-IBA1-EN
Environmental.prod
uct-declarat

COYA Wall mounted two-way diverter - Chrome

36 200 414 Product version from 1/1/2026

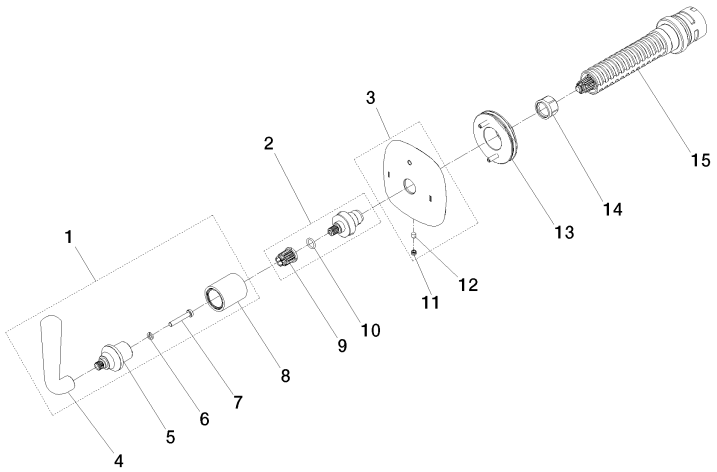

Spare parts list

Number	Item Number	Designation	Number of units	Lead time
7	09 30 30 084 90	screw	1.00	14
9	90 12 12 002 00 90	fixing cap	1.00	14
4	90 20 40 001 02-00	handle	1.00	26
12	90 31 11 007 00 90	pin	1.00	14
8	90 21 02 405 00-00	cover	1.00	26
5	90 12 12 234 00-00	base	1.00	26
1	90 20 40 001 00-00	handle	1.00	26
13	90 21 02 181 00 90	disc	1.00	14
10	90 14 10 060 00 90	seal	1.00	14
15	90 90 03 306 10 90	diverter	1.00	14
3	90 27 40 035 00-00	rosette	1.00	26
2	90 29 06 022 00 90	spindle	1.00	14
14	90 23 30 023 00 90	nut	1.00	14
11	90 31 11 116 00 90	plug	1.00	14
6	90 30 11 029 00 90	disc	1.00	14