Floor mounting rough set -

SERIES-VARIOUS

35 949 970



- brass, lead free
- 2x female thread 1/2" connections
- Mud guard
- Water protection

DORN BRACHT

Floor mounting rough set -

SERIES-VARIOUS

35 949 970

mm [inches]

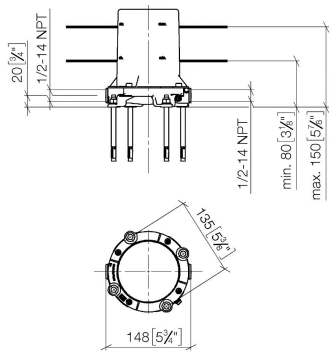

Certificates and sustainability

EPD-DOR-20230287
-IBA1-EN
Environmental.prod
uct-declarat

DORN BRACHT

Floor mounting rough set -

SERIES-VARIOUS

35 949 970

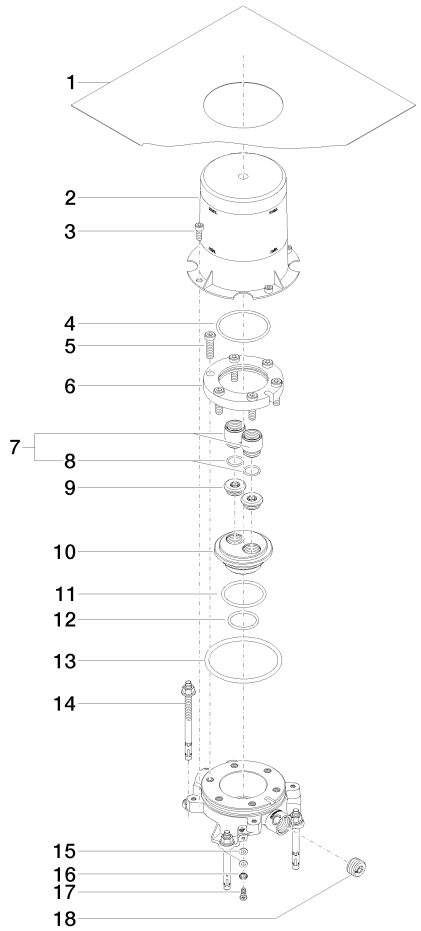

Spare parts list

Number	Item Number	Designation	Number of units	Lead time
3	09 30 30 053 90	screw	4.00	14
13	09 14 10 072 90	seal	1.00	14
15	09 30 11 048 90	disc	1.00	14
7	04 24 03 131 00 90	nipple set	2.00	14
5	09 30 30 047 90	screw	1.00	14
6	09 30 11 121 90	connection	1.00	14
9	04 31 20 006 00 90	plug	2.00	14
14	04 30 35 008 00 90	fixing set	2.00	14
10	09 31 20 033 90	plug	1.00	14
2	09 21 02 116 90	cap	1.00	14
11	09 14 10 084 90	seal	1.00	14
17	09 30 30 058 90	screw	1.00	14
1	04 14 03 077 00 90	gasket kit	1.00	14
12	09 14 10 018 90	seal	1.00	14
18	09 31 20 064 90	plug	2.00	14
4	09 14 10 078 90	seal	6.00	14
8	90 14 10 010 00 90	seal	2.00	14
16	90 30 11 032 00 90	disc	1.00	14