eSET Touchfree Lavatory faucet with temperature adjustment for wall-mounted installation -

SERIES-VARIOUS

35 741 970



- lead-free
- 2x inlet 1/2"
- 2x back flow preventer
- 2x integrated supply stop
- Concealed installation
- Min. rough in depth 3-1/2"
- Max. rough in depth 4-7/8"

Compatible with outlets from Vaia, Lissé, CL.1, IMO, Tara., Tara Logic, Meta.02, Deque, Supernova, Symetrics, LULU and MEM

Not compatible with outlets with pull-rod drains. Please use in combination with pop up drain 10 126 970-FF

Additional series and finishes available upon request (xtra Service)

ATTENTION: Separate terms and conditions for electronic articles are applicable.

eSET Touchfree Lavatory faucet with temperature adjustment for wall-mounted installation -

SERIES-VARIOUS

35 741 970
mm [inches]

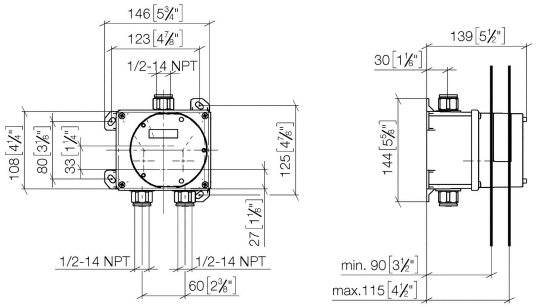

DORN BRACHT

eSET Touchfree Lavatory faucet with temperature adjustment for wall-mounted installation - SERIES-VARIOUS

35 741 970

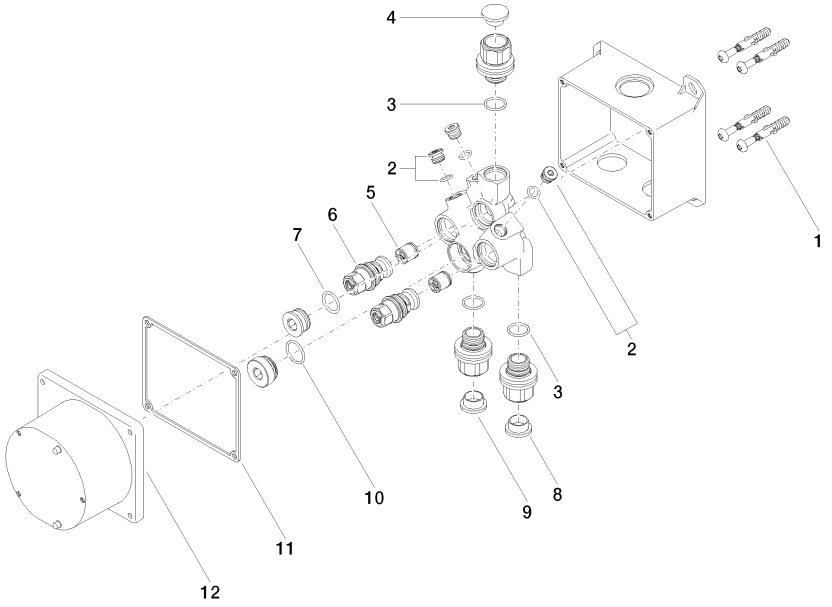

Spare parts list

Number	Item Number	Designation	Number of units	Lead time
10	09 14 10 031 90	seal	1.00	14
12	09 11 11 011 90	lid	1.00	14
9	09 31 20 093 90	plug	1.00	14
7	09 14 10 117 90	seal	1.00	14
4	09 31 20 092 90	plug	1.00	14
6	04 29 05 031 01 90	insert	2.00	14
5	90 23 01 040 00 90	back-flow preventer	2.00	14
11	09 14 03 103 90	seal	1.00	14
8	09 31 20 094 90	plug	1.00	14
1	04 30 31 024 01 90	fixing set	2.00	14
2	04 31 20 039 11 90	plug	3.00	14
3	90 14 10 010 00 90	seal	3.00	14