xTOOL Concealed thermostat rough with two volume controls -

SERIES-VARIOUS

35 527 970 Product version up to 5/12/2021



- brass, lead free
- 2x back flow preventer
- 2x connections 3/4" (hot/cold)
- female thread 1/2" connection
- Thermostat cartridge
- 2x Ceramic disc cartridge
- 3x Water protection
- 3x Mud guard
- Sound insulation
- Center to center mounts 4-3/4"

Recommended article



Extension 1-1/8" - 12 177 970 90

Recommended article



Extension 1-3/4" - 12 178 970 90

DORN BRACHT

xTOOL Concealed thermostat rough with two volume controls -

SERIES-VARIOUS

35 527 970 Product version up to 5/12/2021

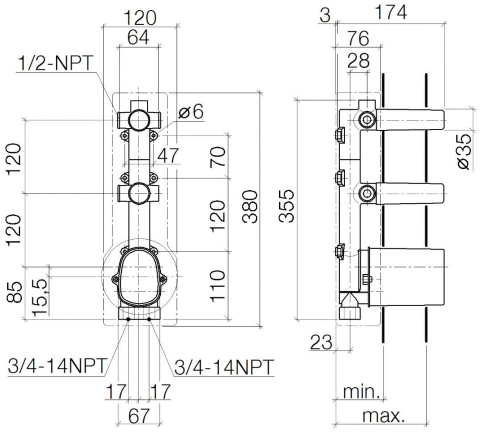

Codes & Standards

ASME A112.18.1 cUPC

Certificates and sustainability

IAPMO_4976 (EPD-DOR-20230287-IBA1-EN Environmental.product-declarat

DORN BRACHT

xTOOL Concealed thermostat rough with two volume controls - SERIES-VARIOUS

35 527 970 Product version up to 5/12/2021

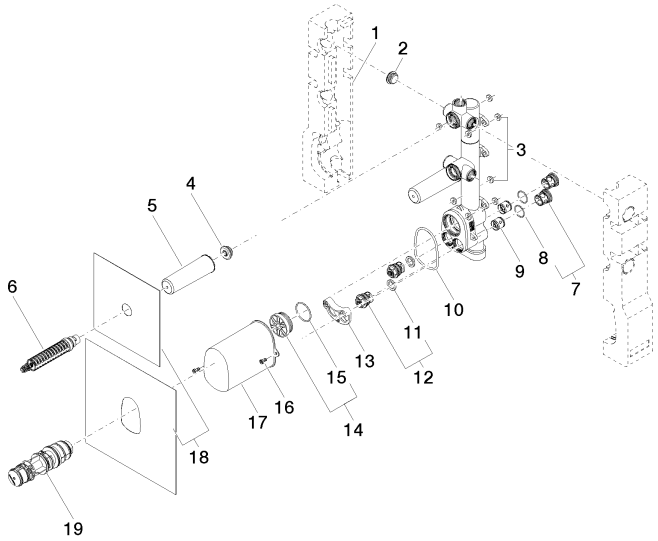

Spare parts list

Number	Item Number	Designation	Number of units	Lead time
11	09 14 05 002 90	seal	2.00	14
9	90 23 01 045 00 90	back-flow preventer	2.00	14
2	04 31 20 062 10 90	plug	3.00	14
5	09 21 02 102 90	cap	2.00	14
1	09 11 11 014 90	accessories	1.00	14
12	90 29 05 031 00 90	insert	2.00	14
15	09 14 10 111 90	seal	1.00	14
8	09 14 10 098 90	seal	2.00	14
3	04 14 05 045 00 90	set	1.00	14
7	04 21 34 077 00 90	nipple	2.00	14
10	09 14 10 189 90	seal	1.00	14
6	90 90 03 143 00 90	top	2.00	14
4	04 31 20 006 00 90	plug	2.00	14
13	90 12 12 218 00 90	base	1.00	14
14	04 31 20 100 00 90	plug	1.00	14
17	09 21 02 103 90	cap	1.00	14
18	04 14 03 073 06 90	gasket kit	1.00	14
16	90 30 30 027 00 90	screw	1.00	14
19	90 15 02 065 00 90	cartridge	1.00	14