META Tub thermostat for wall-mounted installation with hand shower set - Chrome

META

34 234 979 Product version from 7/1/2023



- Spout: Round aerated stream
- Water flow rate limited to max. 4.5 gpm
- Hand-held shower: COMPACT RAIN, flow rate max. 1.8 gpm (at 3 bar)
- Hand shower set with anti-scale technology
- Diverter with integrated volume control
- Flanges Ø 2-3/8"
- 8-1/4" Projection
- 1/2" connection
- Center to center mounts 5-7/8" ± 5/8"
- Metal shower hose 49-1/4" with anti-twist device
- Showerhead holder with rosette, Ø 2-1/4"
- **Internal backflow preventer.**

Internal backflow preventer.

Chrome	34 234 979-00
Brushed Platinum	34 234 979-06
Dark Chrome	34 234 979-19
Light Gold (PVD)	34 234 979-26
Brushed Light Gold (PVD)	34 234 979-27
Matte Black	34 234 979-33
Brushed Gold (PVD)	34 234 979-37
Brushed Dark Brass (PVD)	34 234 979-39
Brushed Bronze (PVD)	34 234 979-42
Brushed Dark Bronze (PVD)	34 234 979-43
Brushed Chrome	34 234 979-93
Brushed Dark Platinum	34 234 979-99

Required article

Rough-in adapter - ●Please order 2 adapters	35 080 970-90 0010

META Tub thermostat for wall-mounted installation with hand shower set - Chrome

34 234 979 Product version from 7/1/2023

mm [inches]

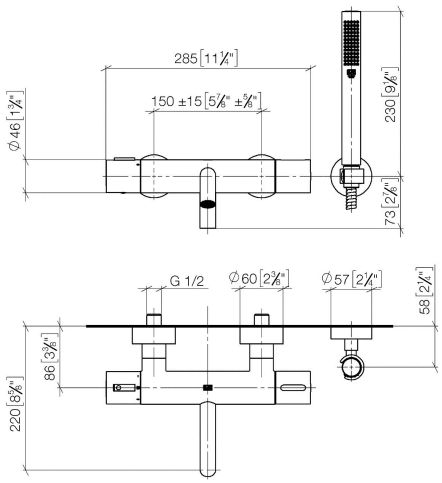

Flow rate chart

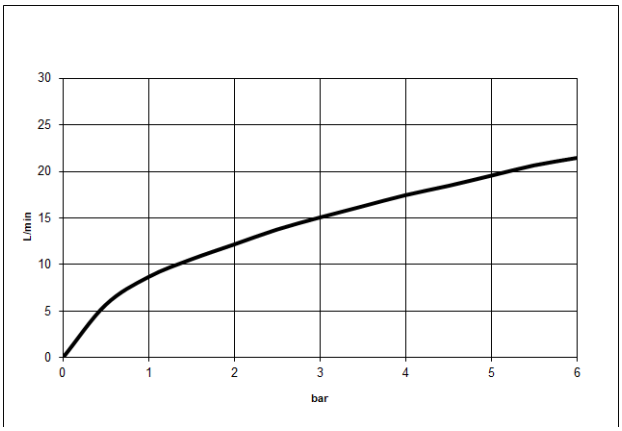

Codes & Standards

California Energy Commission (CEC)	DIN 4109	EN 1717	ISO 3822
Ü-Zeichen			

Certificates and sustainability

LGA_18	Belgaqua_21-032-2	EPD-DOR-20230287-IBA1-EN Environmental.product-declarat	Belgaqua_25-342-2

META Tub thermostat for wall-mounted installation with hand shower set - Chrome

34 234 979 Product version from 7/1/2023

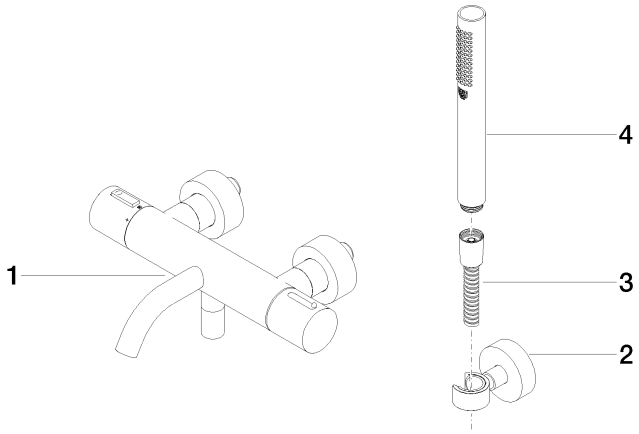

Spare parts list

Number	Item Number	Designation	Number of units	Lead time
4	28 019 979-00	Hand shower - Chrome	1.00	82
2	28 050 920-00	holder	1.00	82
3	90 30 02 072 00-00	Metal shower hose 1/2" x 3/8" x 49-1/4" - Chrome	1.00	26
1	34 201 979-00	META Tub thermostat for wall-mounted installation without hand shower set - Chrome	1.00	-

Spare part can no longer be ordered, please order the replacement item