COYA Single-lever bidet mixer with drain - Chrome

COYA

33 600 404 Product version from 1/1/2026



- 4-1/8" Projection
- US drain with overflow
- Rigid spout
- Ball-joint pivotable through 15°
- Round aerated stream
- Total height 8-1/2"
- Height to aerator/spout outlet 6-1/2"
- 2 x pressure hose with 3/8” female fitting
- 1-3/8" hole diameter
- Water flow rate limited to max. 1.8 gpm

Chrome	33 600 404-00 0010
Brushed Platinum	33 600 404-06 0010
Dark Chrome	33 600 404-19 0010
Brushed Durabrass (23kt Gold)	33 600 404-28 0010
Brushed Dark Brass (PVD)	33 600 404-39 0010
Brushed Bronze (PVD)	33 600 404-42 0010
Brushed Dark Bronze (PVD)	33 600 404-43 0010
Brushed Champagne (22kt Gold)	33 600 404-46 0010
Champagne (22kt Gold)	33 600 404-47 0010
Brushed Dark Platinum	33 600 404-99 0010

COYA Single-lever bidet mixer with drain - Chrome

33 600 404 Product version from 1/1/2026

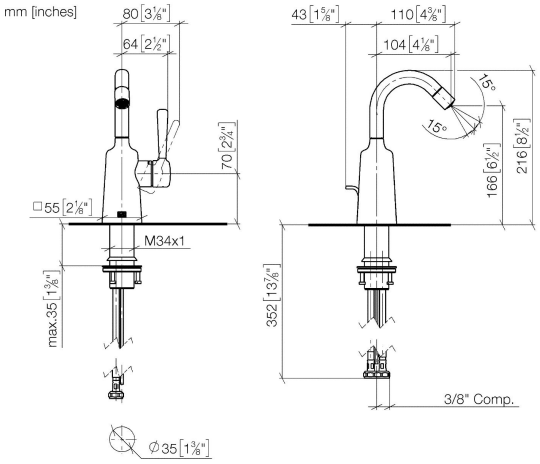

Certificates and sustainability

EPD-DOR-20230287
-IBA1-EN
Environmental.prod
uct-declarat

COYA Single-lever bidet mixer with drain - Chrome

33 600 404 Product version from 1/1/2026

Parts for other finishes can be found here: Brushed Platinum

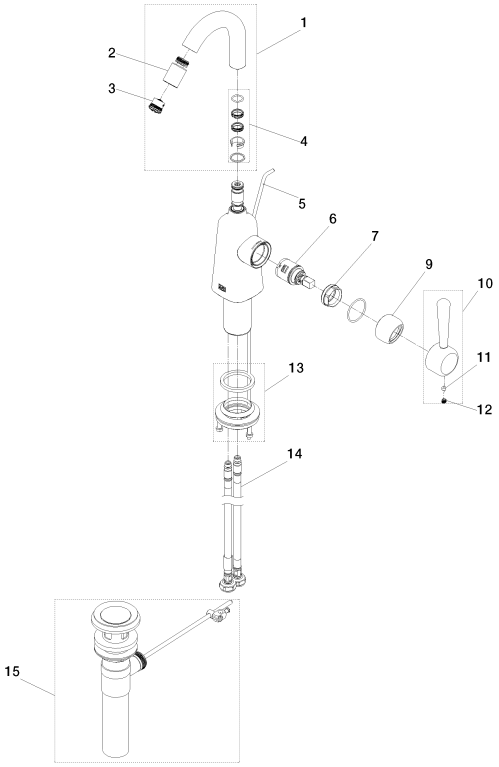

Spare parts list

Number	Item Number	Designation	Number of units	Lead time
1	90 28 22 041 00-00	spout	1.00	26
7	90 24 04 387 00 90	nut	1.00	14
4	90 28 10 166 01 90	ring	1.00	14
12	90 31 20 109 00 90	plug	1.00	14
15	90 11 01 023 00-00	pop-up waste	1.00	26
2	04 21 40 061 00-00	joint	1.00	26
10	90 20 40 007 00-00	handle	1.00	26
9	90 28 30 054 00-00	cover	1.00	26
11	90 31 11 030 00 90	pin	1.00	14
3	09 29 03 126 90	aerator	1.00	14
8	09 14 10 087 90	seal	2.00	14
6	90 15 05 042 00 90	cartridge	1.00	14
14	04 30 04 100 00 90	hose	2.00	14
5	09 31 09 110-00	pull-rod	1.00	26
13	90 23 10 044 10 90	fixing set	1.00	14