LISSÉ Single-lever lavatory mixer with extended shank without drain - Chrome

33 537 845 Product version from 3/9/2016 to 10/31/2018



- 8-1/2" Projection
- Rigid spout
- Round aerated stream
- Total height 11-1/2"
- Height to aerator/spout outlet 9-1/2"
- 1-3/8" hole diameter
- 2 x pressure hose with 3/8” female fitting
- Water flow rate limited to max. 1.2 gpm
- lead-free
- This product can help a building meet the requirements of Green Building Rating Systems, e.g. LEED®, BREEAM®, DGNB

(ADA)

For combination with vessel sinks.

Chrome	33 537 845-00 0010
Brushed Platinum	33 537 845-06 0010
Dark Chrome	33 537 845-19 0010
Brushed Light Gold (PVD)	33 537 845-27 0010
Matte Black	33 537 845-33 0010
Brushed Chrome	33 537 845-93 0010
Brushed Dark Platinum	33 537 845-99 0010

DORN BRACHT

LISSÉ Single-lever lavatory mixer with extended shank without drain - Chrome

33 537 845 Product version from 3/9/2016 to 10/31/2018

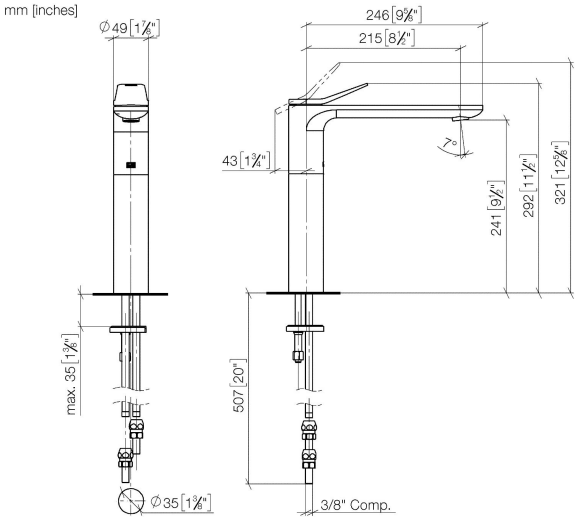

Codes & Standards

ADA	ASME A112.18.1	California Energy Commission (CEC)	cUPC	
EPA WaterSense	NSF372	NSF61	WaterSense	

Certificates and sustainability

IAPMO_N-4976	IAPMO_6397	IAPMO_4976 (	IAPMO_8834	EPD-DOR-20230287-IBA1-EN Environmental.product-declarat

DORN BRACHT

LISSÉ Single-lever lavatory mixer with extended shank without drain - Chrome

33 537 845 Product version from 3/9/2016 to 10/31/2018

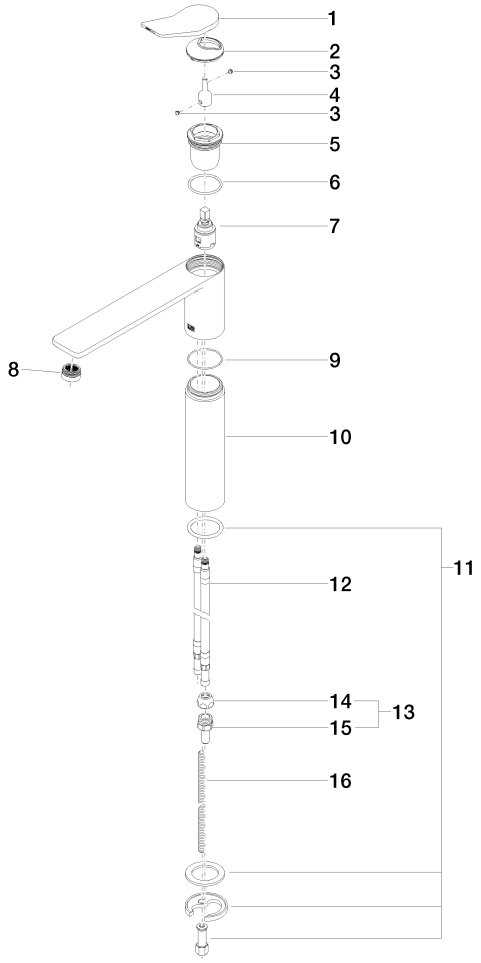

Spare parts list

Number	Item Number	Designation	Number of units	Lead time
8	90 23 01 161 03-00	aerator	1.00	26
13	04 24 04 222 00-00	adaptor	1.00	26
5	09 23 10 123 90	nut	1.00	14
14	04 23 30 031 01-07	threaded connector	2.00	82
4	09 29 06 117-07	extension	1.00	54
15	09 24 04 222 10-00	adaptor	2.00	26
9	09 14 10 108 90	seal	1.00	14
6	09 14 10 038 90	seal	1.00	14
1	90 20 84 020 00-00	handle	1.00	26
7	90 15 05 042 00 90	cartridge	1.00	14
11	04 30 11 038 75 90	fixing set	1.00	14
2	09 28 30 034 90	cover	1.00	14
10	09 28 22 306-00	sleeve	1.00	26
16	09 31 11 095 90	pin	1.00	14
12	04 30 04 098 00 90	hose	2.00	82
3	90 31 11 063 00 90	pin	2.00	14