LISSÉ Single-lever lavatory mixer without drain - Chrome

33 521 845 Product version from 3/9/2016 to 10/31/2018



- 5-1/8" Projection
- Rigid spout
- Round aerated stream
- Total height 5"
- Height to aerator/spout outlet 3"
- 1-3/8" hole diameter
- 2 x pressure hose with 3/8” female fitting
- Water flow rate limited to max. 1.2 gpm
- lead-free
- This product can help a building meet the requirements of Green Building Rating Systems, e.g. LEED®, BREEAM®, DGNB

(ADA)

Chrome	33 521 845-00 0010
Brushed Platinum	33 521 845-06 0010
Dark Chrome	33 521 845-19 0010
Brushed Light Gold (PVD)	33 521 845-27 0010
Matte Black	33 521 845-33 0010
Brushed Chrome	33 521 845-93 0010
Brushed Dark Platinum	33 521 845-99 0010

LISSÉ Single-lever lavatory mixer without drain - Chrome

33 521 845 Product version from 3/9/2016 to 10/31/2018

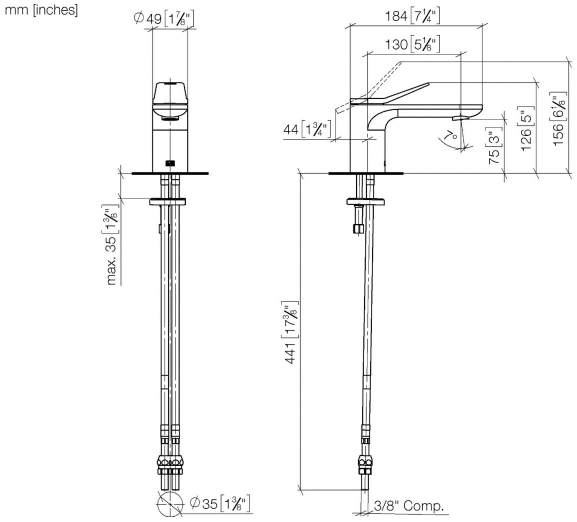

Codes & Standards

ADA	ASME A112.18.1	California Energy Commission (CEC)	cUPC	
EPA WaterSense	NSF372	NSF61	WaterSense	

Certificates and sustainability

IAPMO_N-4976	IAPMO_6397	IAPMO_8834	IAPMO_4976 (	EPD-DOR-20230287-IBA1-EN Environmental.product-declarat

LISSÉ Single-lever lavatory mixer without drain - Chrome

33 521 845 Product version from 3/9/2016 to 10/31/2018

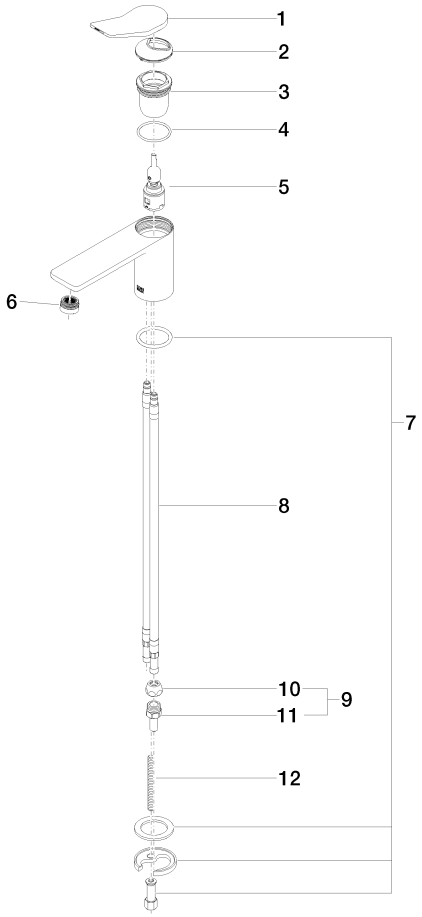

Spare parts list

Number	Item Number	Designation	Number of units	Lead time
1	90 20 84 020 00-00	handle	1.00	26
4	09 14 10 038 90	seal	1.00	14
2	09 28 30 034 90	cover	1.00	14
6	90 23 01 161 03-00	aerator	1.00	26
5	90 15 05 042 01 90	cartridge	1.00	14
7	04 30 11 038 75 90	fixing set	1.00	14
10	04 23 30 031 01-07	threaded connector	2.00	82
8	04 30 04 018 00 90	hose	2.00	14
9	04 24 04 222 00-00	adaptor	1.00	26
12	09 31 11 011 90	pin	1.00	14
11	09 24 04 222 10-00	adaptor	2.00	26
3	09 23 10 123 90	nut	1.00	14