COYA Single-lever lavatory mixer without drain - Chrome

COYA

33 521 404 Product version from 1/1/2026



- 6-1/2" Projection
- Swiveling 360°
- Round aerated stream
- Total height 12-1/8"
- Height to aerator/spout outlet 8-1/2"
- 1-3/8" hole diameter
- 2 x pressure hose with 3/8” female fitting
- 2x 3/8" flexible supply lines
- Water flow rate limited to max. 1.2 gpm
- lead-free
- This product can help a building meet the requirements of Green Building Rating Systems, e.g. LEED®, BREEAM®, DGNB

(ADA)

Chrome	33 521 404-00 0010
Brushed Platinum	33 521 404-06 0010
Dark Chrome	33 521 404-19 0010
Brushed Durabrass (23kt Gold)	33 521 404-28 0010
Brushed Dark Brass (PVD)	33 521 404-39 0010
Brushed Bronze (PVD)	33 521 404-42 0010
Brushed Dark Bronze (PVD)	33 521 404-43 0010
Brushed Champagne (22kt Gold)	33 521 404-46 0010
Champagne (22kt Gold)	33 521 404-47 0010
Brushed Dark Platinum	33 521 404-99 0010

DORN BRACHT

COYA Single-lever lavatory mixer without drain - Chrome

33 521 404 Product version from 1/1/2026

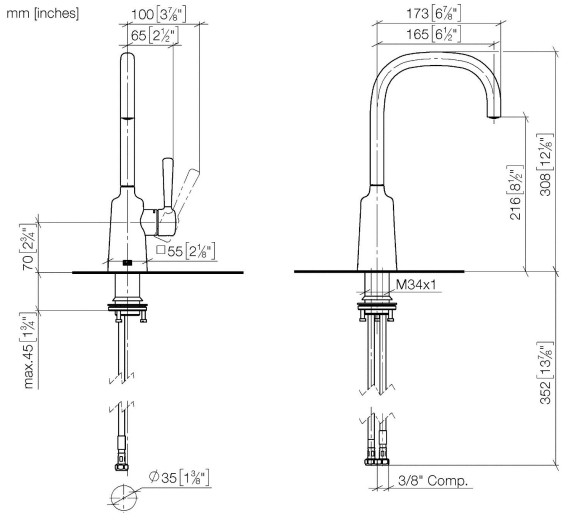

Codes & Standards

ASME A112.18.1	cUPC	EPA WaterSense	NSF372
NSF61	WaterSense		

Certificates and sustainability

IAPMO_N-4976	IAPMO_6397	EPD-DOR-20230287 -IBA1-EN Environmental.product-declarat	IAPMO_4976 (	IAPMO_8834

COYA Single-lever lavatory mixer without drain - Chrome

33 521 404 Product version from 1/1/2026

Parts for other finishes can be found here: Brushed Platinum

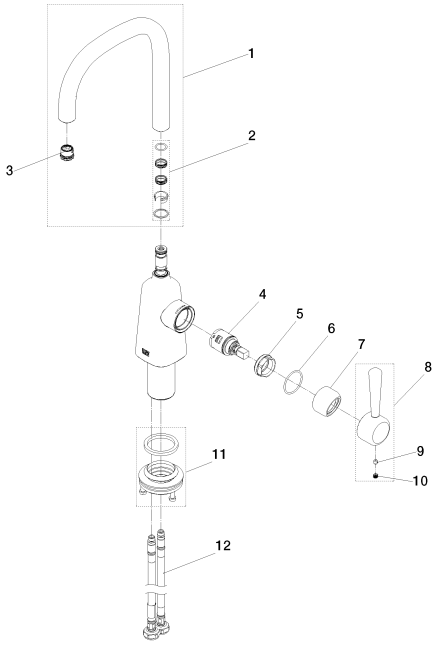

Spare parts list

Number	Item Number	Designation	Number of units	Lead time
1	90 28 22 046 00-00	spout	1.00	26
8	90 20 40 007 00-00	handle	1.00	26
2	90 28 10 166 01 90	ring	1.00	14
11	90 23 10 044 10 90	fixing set	1.00	14
4	90 15 05 042 00 90	cartridge	1.00	14
9	90 31 11 030 00 90	pin	1.00	14
3	09 29 03 125 90	aerator	1.00	14
12	04 30 04 100 00 90	hose	2.00	14
7	90 28 30 054 00-00	cover	1.00	26
5	90 24 04 387 00 90	nut	1.00	14
6	09 14 10 087 90	seal	2.00	14
10	90 31 20 109 00 90	plug	1.00	14