MEM Single-lever lavatory mixer with drain - Chrome

MEM

33 502 782 Product version from 9/1/2022



- 4-1/2" Projection
- US drain with overflow
- Rigid spout
- Rectangular aerated stream
- Total height 11-1/8"
- Height to aerator/spout outlet 8-1/2"
- 1-3/8" hole diameter
- 2x 3/8" flexible supply lines
- 2x 3/8" US flexible supply lines
- Water flow rate limited to max. 1.2 gpm
- lead-free
- This product can help a building meet the requirements of Green Building Rating Systems, e.g. LEED®, BREEAM®, DGNB

Suitable only for basins with overflow.

(ADA)

Chrome	33 502 782-00 0010
Brushed Platinum	33 502 782-06 0010
Platinum	33 502 782-08 0010
Dark Chrome	33 502 782-19 0010
Brushed Durabrass (23kt Gold)	33 502 782-28 0010
Brushed Dark Brass (PVD)	33 502 782-39 0010
Brushed Bronze (PVD)	33 502 782-42 0010
Brushed Dark Bronze (PVD)	33 502 782-43 0010
Brushed Champagne (22kt Gold)	33 502 782-46 0010
Champagne (22kt Gold)	33 502 782-47 0010
Brushed Dark Platinum	33 502 782-99 0010

DORN BRACHT

MEM Single-lever lavatory mixer with drain - Chrome

MEM

33 502 782 Product version from 9/1/2022

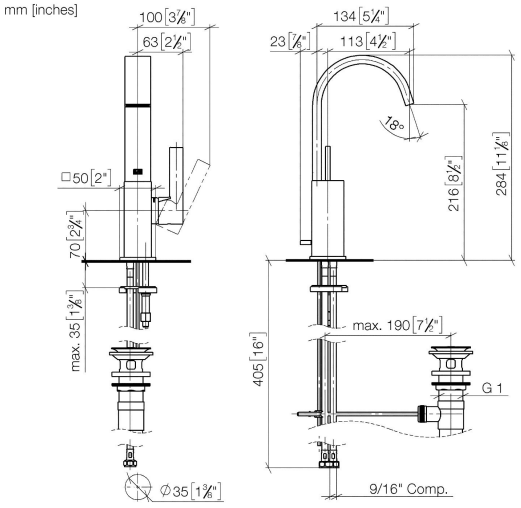

Codes & Standards

ADA	ASME A112.18.1	California Energy Commission (CEC)	cUPC
NSF372	NSF61		

Certificates and sustainability

IAPMO_6397	IAPMO_N-4976	IAPMO_4976 (	EPD-DOR-20230287 -IBA1-EN Environmental.product-declarat

DORN BRACHT

MEM Single-lever lavatory mixer with drain - Chrome

33 502 782 Product version from 9/1/2022

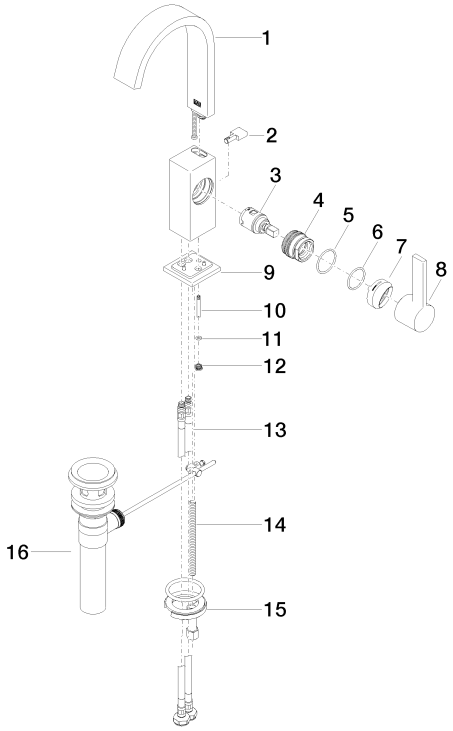

Spare parts list

Number	Item Number	Designation	Number of units	Lead time
12	09 24 04 290 90	nipple	1.00	14
9	90 27 66 021 00-00	rosette	1.00	26
3	90 15 05 042 00 90	cartridge	1.00	14
8	90 20 86 004 00-00	handle	1.00	26
4	09 24 04 288 90	nut	1.00	14
5	09 14 10 137 90	seal	1.00	14
1	90 28 22 366 10-00	spout	1.00	26
2	09 20 78 032-00	handle	1.00	26
14	09 31 11 012 90	pin	1.00	14
11	09 14 10 166 90	seal	1.00	14
15	04 30 11 038 00 90	fixing set	1.00	14
10	09 31 09 080-00	pull-rod	1.00	26
13	04 30 04 102 00 90	Flexible supply line M8x1 x 9/16" x 420 mm -	2.00	14
7	90 28 30 051 00-00	cover	1.00	26
6	90 14 10 063 00 90	seal	1.00	14
16	90 11 01 023 00-00	pop-up waste	1.00	26