META Single-lever tub mixer for wall-mounted installation with hand shower set - Chrome

META

33 233 660 Product version from 7/1/2023



- Spout: Round aerated stream
- Water flow rate limited to max. 3.7 gpm
- Hand-held shower: COMPACT RAIN, flow rate max. 1.8 gpm (at 3 bar)
- Hand shower set with anti-scale technology
- Integrated diverter
- 8" Projection
- Flanges Ø 2-3/8"
- Center to center mounts 5-7/8" ± 5/8"
- 1/2" connection
- Metal shower hose 49-1/4" with anti-twist device
- Showerhead holder with rosette, Ø 2-1/4"

Internal backflow preventer.

NOTE: Local building codes may require the use of an anti-scald device. Please refer to remote pressure balance valve (35 914 970 90)

Internal backflow preventer.

NOTE: Local building codes may require the use of an anti-scald device. Please refer to remote pressure balance valve (35 914 970 90)

Chrome	33 233 660-00
Brushed Platinum	33 233 660-06
Dark Chrome	33 233 660-19
Light Gold (PVD)	33 233 660-26
Brushed Light Gold (PVD)	33 233 660-27
Matte Black	33 233 660-33
Brushed Gold (PVD)	33 233 660-37
Brushed Dark Brass (PVD)	33 233 660-39
Brushed Bronze (PVD)	33 233 660-42
Brushed Dark Bronze (PVD)	33 233 660-43
Brushed Chrome	33 233 660-93
Brushed Dark Platinum	33 233 660-99

Required article

Rough-in adapter - ●Please order 2 adapters	35 080 970-90 0010

DORN BRACHT

META Single-lever tub mixer for wall-mounted installation with hand shower set - Chrome

33 233 660 Product version from 7/1/2023

mm [inches]

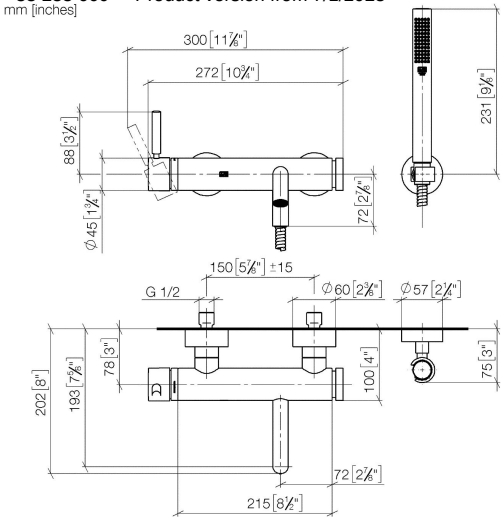

Flow rate chart

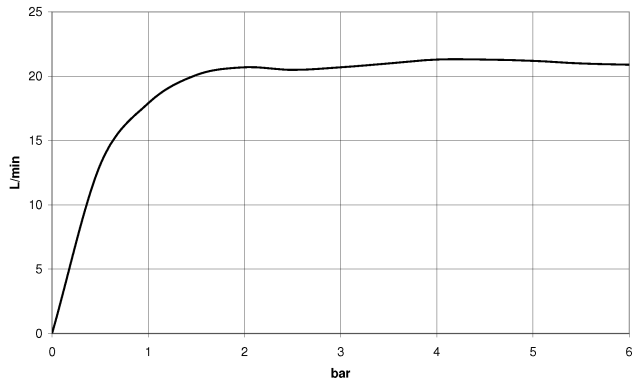

Codes & Standards

California Energy Commission (CEC)	DIN 4109	EN 1717	ISO 3822
Scottish Water Byelaws	UK Water Supply Regulations	Ü-Zeichen	

META Single-lever tub mixer for wall-mounted installation with hand shower set - Chrome

33 233 660 Product version from 7/1/2023

Certificates and sustainability

Belgaqua_21-025-2	LGA_29	WRAS_2207	Belgaqua_25-338-2	EPD-DOR-20230287-IBA1-EN Environmental.product-declarat

META Single-lever tub mixer for wall-mounted installation with hand shower set - Chrome

33 233 660 Product version from 7/1/2023

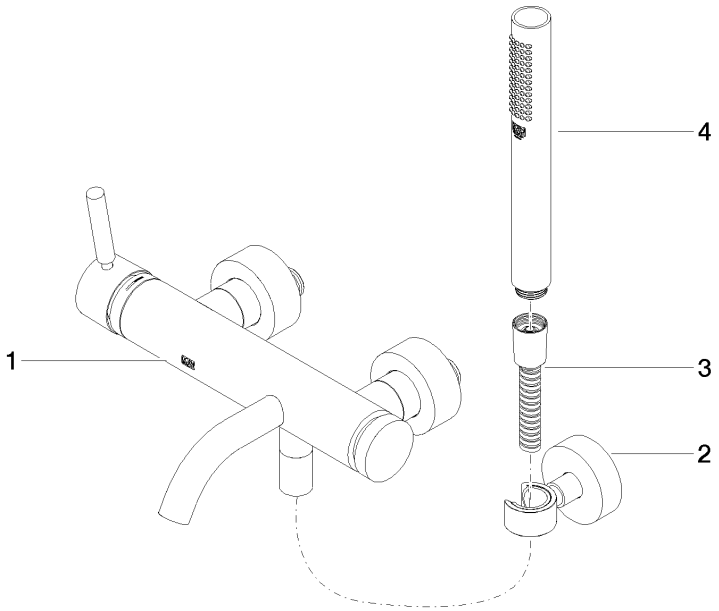

Spare parts list

Number	Item Number	Designation	Number of units	Lead time
1	33 200 660-00	META Single-lever tub mixer for wall-mounted installation without hand shower set - Chrome	1.00	26
2	28 050 920-00	holder	1.00	82
3	90 30 02 072 00-00	Metal shower hose 1/2" x 3/8" x 49-1/4" - Chrome	1.00	26
4	90 12 11 140 41-00	shower	1.00	26