DORN BRACHT

# LISSÉ Single-lever tub mixer for wall-mounted installation without hand shower set - Chrome



33 200 845 Product version from 3/9/2016 to 7/16/2018



- 7-1/2"-7-7/8" Projection
- Round aerator
- Integrated diverter
- 3/8" Shower outlet
- Flanges Ø 2-3/8"
- 1/2" connection
- Center to center mounts 5-7/8" ± 5/8"
- Water flow rate limited to max. 3.6 gpm

Internal backflow preventer.

NOTE: Local building codes may require the use of an anti-scald device. Please refer to remote pressure balance valve (35 914 970 90)

NOTE: Hand shower sold separately. For more hand shower options, please see the miscellaneous articles section of each series.

| | |
|---|---|
| Chrome | 33 200 845-00 |
| Brushed Platinum | 33 200 845-06 |
| Dark Chrome | 33 200 845-19 |
| Brushed Light Gold (PVD) | 33 200 845-27 |
| Matte Black | 33 200 845-33 |
| Brushed Chrome | 33 200 845-93 |
| Brushed Dark Platinum | 33 200 845-99 |

# LISSÉ Single-lever tub mixer for wall-mounted installation without hand shower set - Chrome



33 200 845 Product version from 3/9/2016 to 7/16/2018

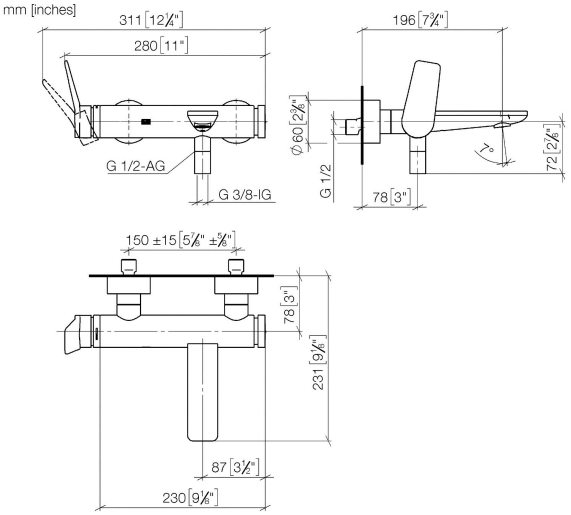


## Flow rate chart

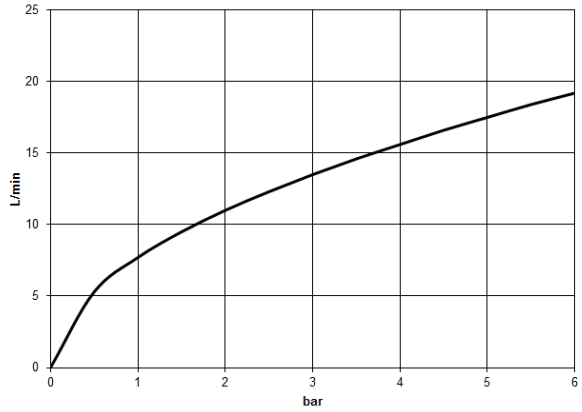


## Codes & Standards

| | | | |
|---|---|---|---|
| ASME A112.18.1 | California Energy Commission (CEC) | cUPC | DIN 4109 |
| ISO 3822 | Scottish Water Byelaws | UK Water Supply Regulations | Ü-Zeichen |

# LISSÉ Single-lever tub mixer for wall-mounted installation without hand shower set - Chrome

33 200 845 Product version from 3/9/2016 to 7/16/2018

## Certificates and sustainability

| | | | |
|---|---|---|---|
| LGA_9 | WRAS_2311 | IAPMO_4976 ( | EPD-DOR-20230287-IBA1-EN Environmental.product-declarat |

# LISSÉ Single-lever tub mixer for wall-mounted installation without hand shower set - Chrome

33 200 845 Product version from 3/9/2016 to 7/16/2018

Parts for other finishes can be found here: Brushed Platinum

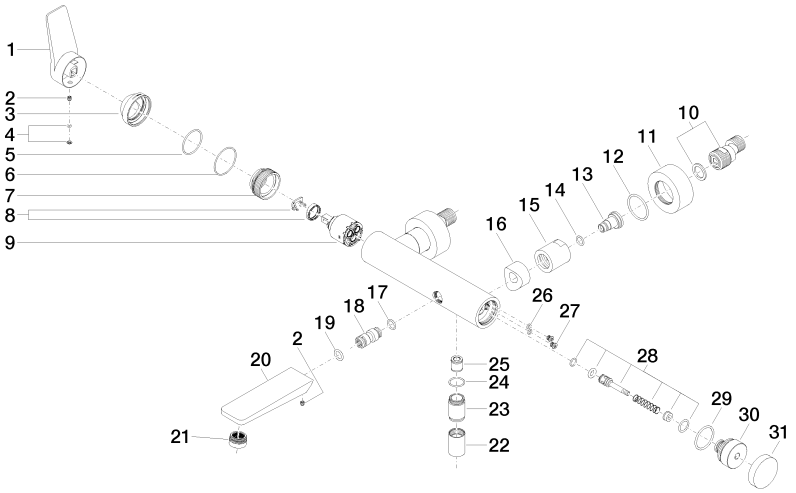

# LISSÉ Single-lever tub mixer for wall-mounted installation without hand shower set - Chrome

33 200 845 Product version from 3/9/2016 to 7/16/2018

## Spare parts list

| Number | Item Number | Designation | Number of units | Lead time |
|---|---|---|---|---|
| 11 | 09 27 62 004-00 | rosette | 2.00 | 26 |
| 18 | 09 24 04 043 90 | nipple | 1.00 | 14 |
| 1 | 09 20 84 021-00 | handle | 1.00 | 26 |
| 9 | 90 15 05 064 00 90 | cartridge | 1.00 | 14 |
| 10 | 04 11 04 030 00 90 | connection | 2.00 | 14 |
| 16 | 09 18 40 059-00 | sleeve | 2.00 | 26 |
| 31 | 09 20 62 031-00 | handle | 1.00 | 26 |
| 23 | 09 24 03 115 20-00 | nipple | 1.00 | 26 |
| 14 | 09 14 10 008 90 | seal | 2.00 | 14 |
| 4 | 90 31 20 087 00-00 | plug | 1.00 | 26 |
| 15 | 09 23 10 048-00 | nut | 2.00 | 26 |
| 27 | 09 30 30 113 20 90 | screw | 2.00 | 14 |
| 28 | 90 31 09 032 00-00 | diverter | 1.00 | 26 |
| 3 | 09 28 30 032-00 | cover | 1.00 | 26 |
| 7 | 09 24 04 296 90 | nut | 1.00 | 14 |
| 21 | 90 23 01 161 00-00 | aerator | 1.00 | 26 |
| 26 | 09 14 10 001 90 | seal | 2.00 | 14 |
| 17 | 09 14 10 003 90 | seal | 1.00 | 14 |
| 30 | 09 21 10 035 20-00 | nipple | 1.00 | 26 |
| 5 | 09 14 10 102 90 | seal | 1.00 | 14 |
| 20 | 09 11 84 012-00 | spout | 1.00 | 26 |
| 6 | 09 14 10 190 90 | seal | 1.00 | 14 |
| 29 | 09 14 10 101 90 | seal | 1.00 | 14 |
| 12 | 09 14 10 119 90 | seal | 2.00 | 14 |
| 22 | 90 21 02 069 00-00 | cover | 1.00 | 26 |
| 13 | 09 29 05 005 20 90 | nipple | 2.00 | 82 |
| 19 | 90 14 10 011 00 90 | seal | 1.00 | 14 |
| 24 | 90 14 10 032 00 90 | seal | 1.00 | 14 |
| 8 | 90 28 10 148 00 90 | accessories | 1.00 | 14 |
| 2 | 90 31 11 030 00 90 | pin | 2.00 | 14 |
| 25 | 90 23 01 141 00 90 | back-flow preventer | 1.00 | 14 |