META SQUARE Two-hole mixer with individual flanges - Brushed Platinum

META SQUARE

32 815 861 Product version from 10/1/2024



- 9-1/4" Projection
- Swiveling spout 360°
- Optional restricted swivel available with swivel limiter set 12 820 970 90
- Aerated stream
- Total height 13-1/4"
- Height to aerator/spout outlet 10-3/8"
- Individual flanges 2-3/8" x 2-3/8"
- Spout hole diameter 1-3/8"
- Single-lever mixer hole diameter 1-3/8"
- 2 x pressure hose with 3/8” female fitting
- Water flow rate limited to max. 1.5 gpm
- lead-free
- This product can help a building meet the requirements of Green Building Rating Systems, e.g. LEED®, BREEAM®, DGNB

(ADA)

Flexible positioning of components.

Brushed Platinum	32 815 861-06 0010
Chrome	32 815 861-00 0010
Platinum	32 815 861-08 0010
Dark Chrome	32 815 861-19 0010
Brushed Durabrass (23kt Gold)	32 815 861-28 0010
Matte Black	32 815 861-33 0010
Brushed Dark Brass (PVD)	32 815 861-39 0010
Brushed Bronze (PVD)	32 815 861-42 0010
Brushed Dark Bronze (PVD)	32 815 861-43 0010
Brushed Champagne (22kt Gold)	32 815 861-46 0010
Champagne (22kt Gold)	32 815 861-47 0010
Brushed Chrome	32 815 861-93 0010
Brushed Dark Platinum	32 815 861-99 0010

Recommended article

AIR SWITCH operating button, trim parts only - Brushed Platinum 10 713 970-06

Recommended article



Soap dispenser without flange - Brushed Platinum 82 424 970-06

DORN BRACHT

META SQUARE Two-hole mixer with individual flanges - Brushed Platinum

32 815 861 Product version from 10/1/2024

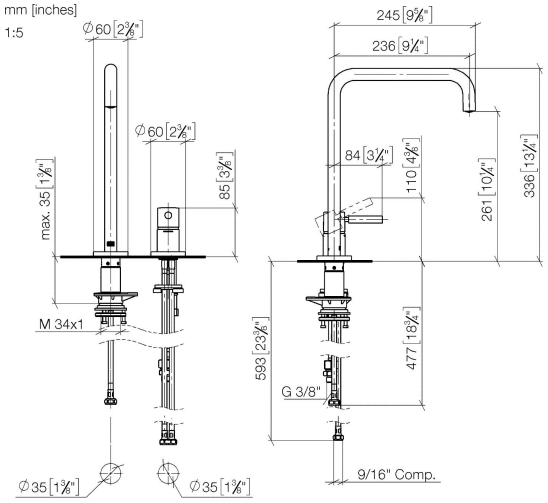

Codes & Standards

ADA	ASME A112.18.1	California Energy Commission (CEC)	cUPC
NSF372	NSF61		

Certificates and sustainability

IAPMO_6397	IAPMO_N-4976	IAPMO_4976 (	EPD-DOR-20230287 -IBA1-EN Environmental.product-declarat

DORN BRACHT

META SQUARE Two-hole mixer with individual flanges - Brushed Platinum

32 815 861 Product version from 10/1/2024

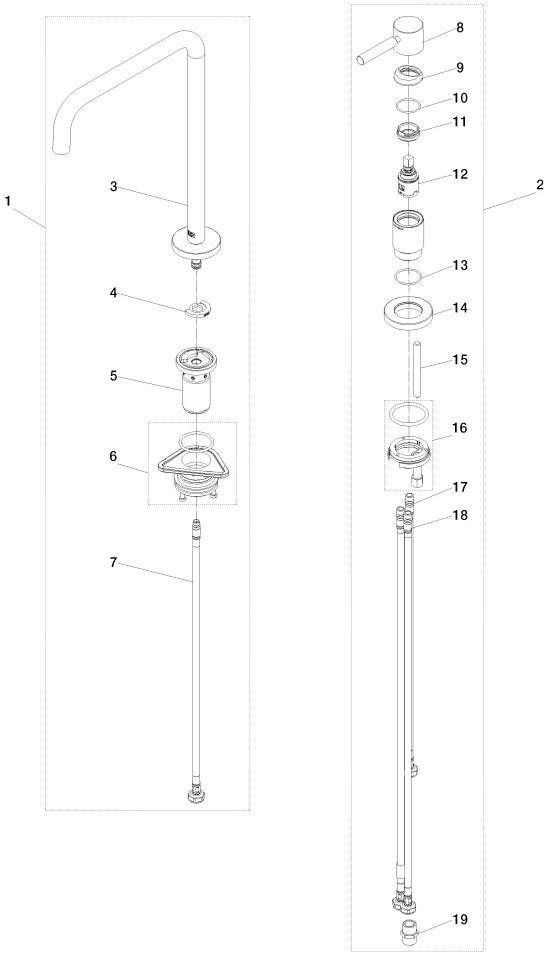

Spare parts list

Number	Item Number	Designation	Number of units	Lead time
1	90 28 22 288 01-06	spout	1.00	26
12	90 15 05 042 00 90	cartridge	1.00	14
6	04 23 10 044 08 90	fixing set	1.00	14
9	09 28 30 026-06	cover	1.00	26
10	09 14 10 091 90	seal	1.00	14
8	90 20 66 003 00-06	handle	1.00	26
4	12 820 970 90	Swivel limiter set -	1.00	14
15	09 31 11 011 90	pin	1.00	14
5	90 30 01 299 00 90	shaft	1.00	14
13	09 14 10 110 90	seal	1.00	14
16	04 30 11 085 97 90	fixing set	1.00	14
18	04 30 04 107 00 90	hose	2.00	14
2	90 20 66 003 02-06	handle	1.00	26
7	04 30 04 100 00 90	hose	1.00	14
14	09 27 97 040-06	rosette	1.00	26
11	09 24 04 266 90	nut	1.00	14
19	90 24 03 250 00 90	nipple	1.00	14
17	04 30 04 104 00 90	hose	1.00	14
3	90 28 22 288 00-06	spout	1.00	26