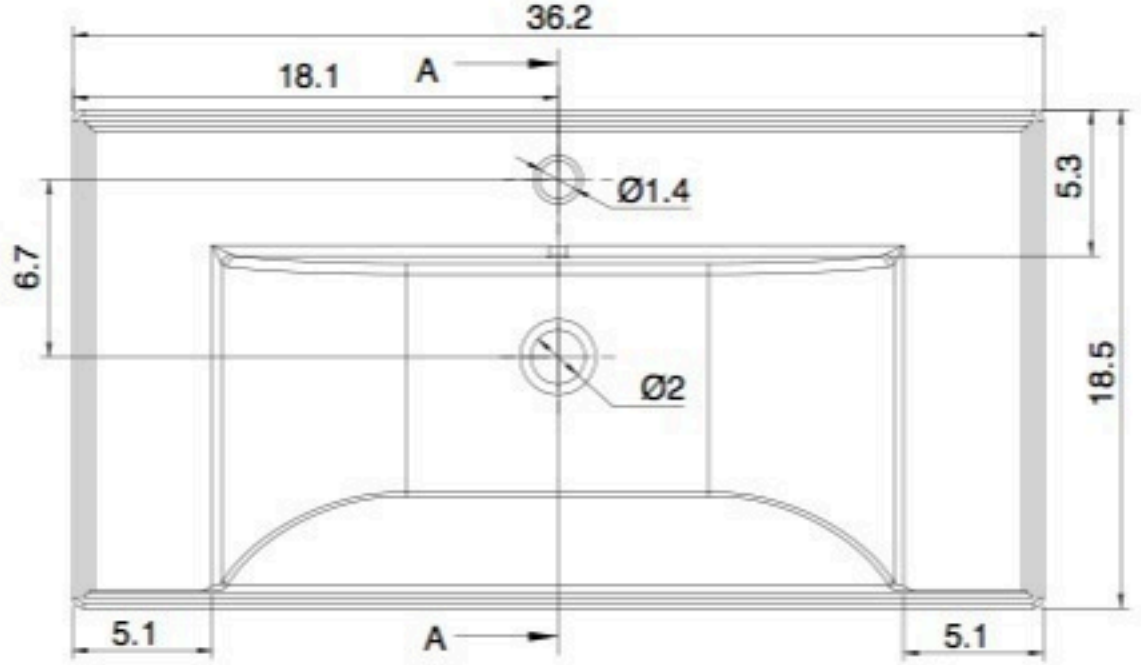
36.2
18.1
A
Ø1.4
5.3
6.7
Ø2
18.5
5.1
A
5.1

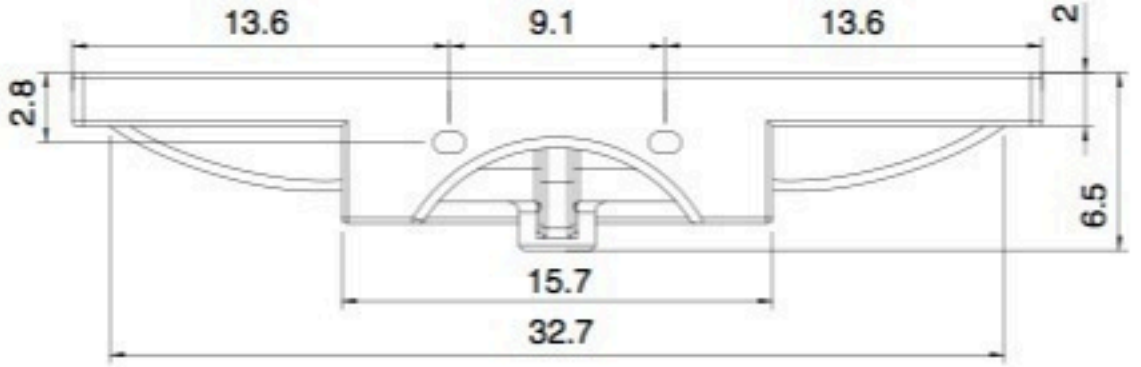
13.6
9.1
13.6
2
2.8
6.5
15.7
32.7

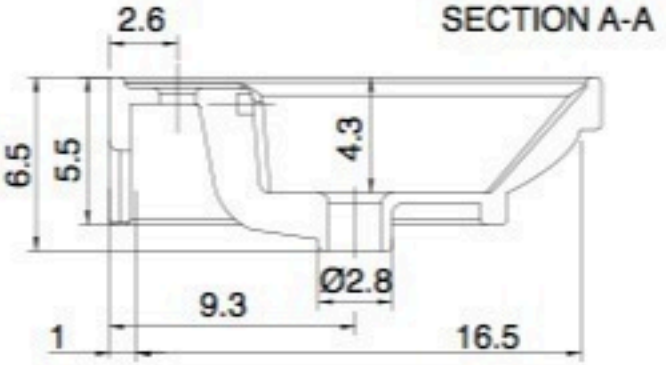
2.6
SECTION A-A
6.5
5.5
4.3
Ø2.8
9.3
1
16.5