3-1002BP

PRODUCT DIMENSIONS *(Units are in inches)*

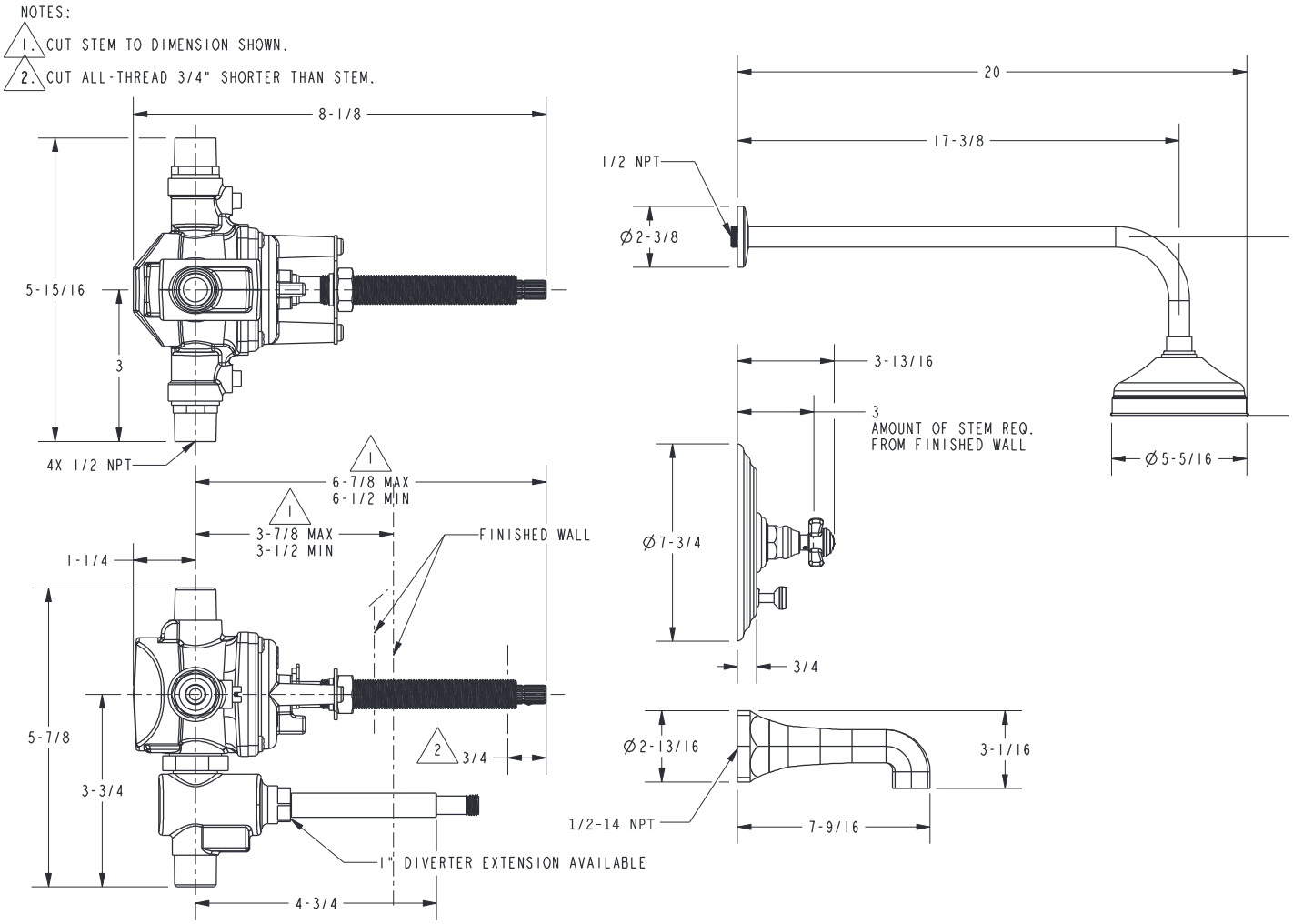

NEWPORT BRASS
Flawless Beauty. From Faucet to Finish.™

t: 949.417.5207 | www.newportbrass.com

©2016 Brasstech, Inc.