DURAVIT

ME by Starck # 2809310092

Design by Philippe Starck

Urinal



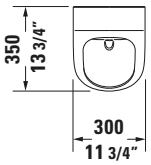

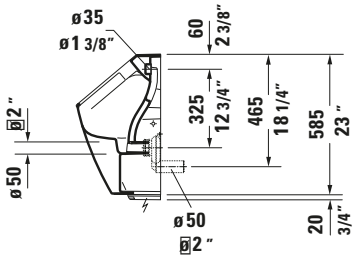

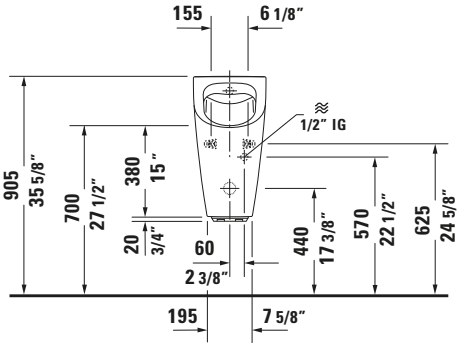

Basic information	
Long description	Duravit ME by Starck Urinal, White High Gloss, 13 3/4 ", Inlet supply position: Rear, Battery operation, Flushing rim: rimless, Hardware included – 2809310092

Features	
Drain	
Outlet	horizontal
color	
color value	White
Gloss level	High Gloss
Material	
Material	Ceramic
Batteries	
Number of batteries	1
Flushing	
Flushing rim	rimless
Flush technology	Rimless
Minimum flushing water volume	0.13 GPF
Water connection position	Rear
Dangerous goods	
Battery type	CR-P2
Relevant certificates	
ADA	✓
cC/IAPMO®	✓

Specifications	
Electronic control	Battery operation

Features	
accessories	
Includes battery	✓

Logistics	
Article weight	42.108 lb

Matching products

Matching items



P-Trap
 # 0051130000
Universal

Required Items



P-Trap
 # 0051130000
Universal

Description texts	
Tender text	Duravit ME by Starck Urinal White High Gloss, Designer: Philippe Starck, Flushing rim: rimless, Electronic control: Battery operation, Sanitary ware, Outlet: horizontal, Shape: Round, Minimum flushing water volume: 0.13 GPF, Wall-mounted, Water connection position: Rear, Inlet supply position: Rear, White, High Gloss, Concealed inflow, Urinal fly: None, Includes battery, Hardware included, Includes control unit, CE-number plate-1: EN13407, EAN No.: 4053424088006, Article weight: 42.108 lb, Dimensions (Width / Length x Depth/width x Height): 11 3/4 " x 13 3/4 " x 23 7/8 ", Article No.: 2809310092

You can find more information here

https://pro.duravit.us/p/2809310092

All drawings contain the necessary measurements which are subject to standard tolerances. They are stated in mm and are non-binding. Exact measurements, in particular for customised installation scenarios, can only be taken from the finished piece.