COYA Wall bracket - Chrome

COYA

28 050 404 Product version from 1/1/2026



- Flange 2-3/8" x 2-3/8"

Chrome	28 050 404-00
Brushed Platinum	28 050 404-06
Dark Chrome	28 050 404-19
Brushed Durabrass (23kt Gold)	28 050 404-28
Brushed Dark Brass (PVD)	28 050 404-39
Brushed Bronze (PVD)	28 050 404-42
Brushed Dark Bronze (PVD)	28 050 404-43
Brushed Champagne (22kt Gold)	28 050 404-46
Champagne (22kt Gold)	28 050 404-47
Brushed Dark Platinum	28 050 404-99

COYA Wall bracket - Chrome

28 050 404 Product version from 1/1/2026

mm [inches]

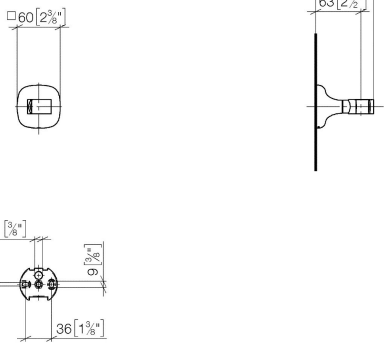

COYA Wall bracket - Chrome

28 050 404 Product version from 1/1/2026

Parts for other finishes can be found here: Brushed Platinum

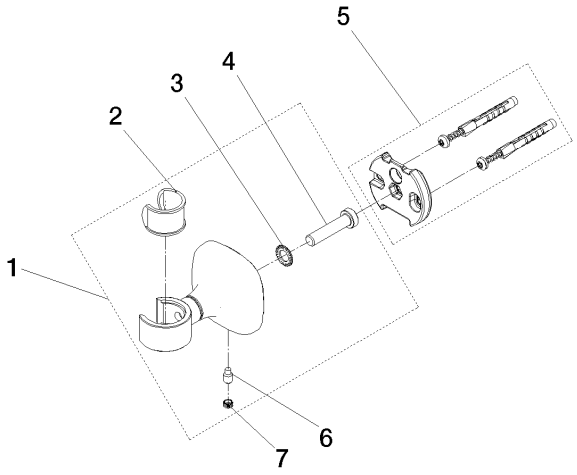

Spare parts list

Number	Item Number	Designation	Number of units	Lead time
3	09 30 11 027 90	disc	1.00	14
5	05 17 97 507 00 90	fixing set	1.00	14
2	90 18 40 035 00 90	sleeve	1.00	14
7	90 31 11 119 00 90	plug	1.00	14
6	04 31 11 140 00 90	pin	1.00	14
4	09 30 30 056 90	screw	1.00	82
1	90 17 20 028 00-00	holder	1.00	26