CYO Deck-mounted tub mixer, with hand shower set for deck-mounted tub installation - Chrome

CYO

27 632 811



- 6-5/8" Projection
- Spout: Rectangular aerator
- Water flow rate limited to max. 6.3 gpm
- Hand-held shower: COMPACT RAIN, flow rate max. 1.8 gpm (at 3 bar)
- Hand shower set with anti-scale technology
- Integrated diverter
- Total height 7-3/4"
- Height to aerator/spout outlet 5-1/4"
- Spout hole diameter 1-1/8"
- Hole diameter for hand shower set 1-1/4"
- Flange for mixer 2-3/8" x 2-3/8"
- Hand shower set with flange 2-3/8" x 2-3/8"
- Metal shower hose 68-7/8" with anti-twist device

Internal backflow preventer.

NOTE: Local building codes may require the use of an anti-scald device. Please refer to remote pressure balance valve (35 914 970 90)

Chrome	27 632 811-00
Brushed Platinum	27 632 811-06
Dark Chrome	27 632 811-19
Brushed Durabrass (23kt Gold)	27 632 811-28
Brushed Dark Platinum	27 632 811-99

CYO Deck-mounted tub mixer, with hand shower set for deck-mounted tub installation - Chrome

CYO

27 632 811
mm [inches]
M 1:10

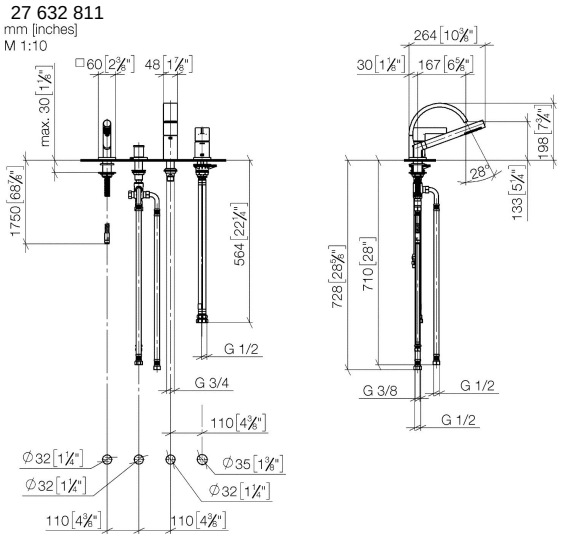

Flow rate chart

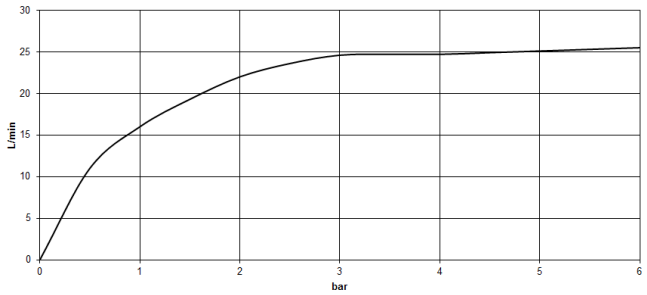

Codes & Standards

ASME A112.18.1	California Energy Commission (CEC)	cUPC	DIN 4109
EN 1717	ISO 3822	Scottish Water Byelaws	UK Water Supply Regulations

Ü-Zeichen

CYO Deck-mounted tub mixer, with hand shower set for deck-mounted tub installation - Chrome

27 632 811

Certificates and sustainability

LGA_38	IAPMO_4976	WRAS_2204	Belgaqua_21-380-2	EPD-DOR-20230287-IBA1-EN Environmental.product-declarat

DORN BRACHT

CYO Deck-mounted tub mixer, with hand shower set for deck-mounted tub installation - Chrome

27 632 811

Parts for other finishes can be found here: Brushed Platinum

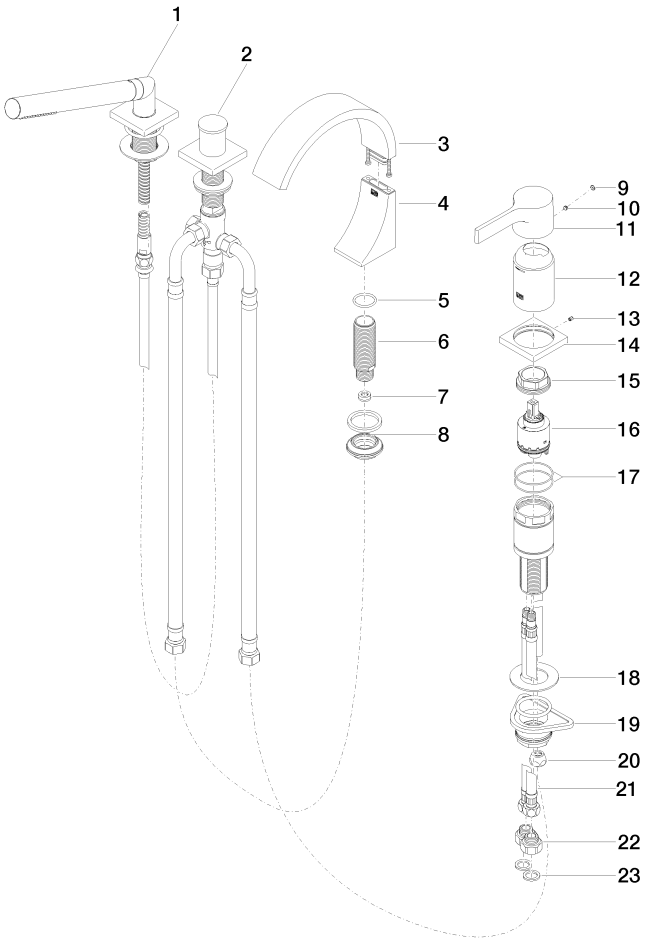

CYO Deck-mounted tub mixer, with hand shower set for deck-mounted tub installation - Chrome

27 632 811

Spare parts list

Number	Item Number	Designation	Number of units	Lead time
8	04 23 10 044 09 90	fixing set	1.00	14
17	09 14 10 201 90	seal	2.00	14
2	29 140 670-00	Two-way diverter for deck-mounted tub installation - Chrome	1.00	26
1	27 702 980-00	Hand shower set for deck-mounted tub installation - Chrome	1.00	26
7	09 23 01 057 90	flow reducer	1.00	14
21	04 30 04 021 00 90	hose	2.00	14
12	09 28 30 037-00	cover	1.00	26
9	90 31 20 087 00-00	plug	1.00	26
13	09 31 11 044 90	pin	1.00	14
18	09 30 11 060 90	disc	1.00	14
11	09 20 67 007-00	handle	1.00	26
6	09 30 01 117 90	connection	1.00	14
5	09 14 10 009 90	seal	1.00	14
22	09 24 03 185-00	nipple	2.00	26
14	09 27 67 016-00	rosette	1.00	26
15	09 24 04 448 90	nut	1.00	14
3	90 11 70 013 00-00	spout	1.00	26
23	09 14 05 004 90	seal	2.00	14
4	90 19 70 011 00-00	connection	1.00	26
20	04 23 30 041 00 90	threaded connector	1.00	14
19	04 23 10 044 02 90	fixing set	1.00	14
16	90 15 05 039 00 90	cartridge	1.00	14
10	90 31 11 063 00 90	pin	1.00	14