# COYA Deck-mounted tub mixer, with hand shower set for deck-mounted tub installation - Chrome

COYA

27 632 404 Product version from 1/1/2026



- Spout: Round aerated stream
- Water flow rate limited to max. 4.8 gpm
- Hand-held shower: COMPACT RAIN, flow rate max. 1.8 gpm (at 3 bar)
- Hand shower set with anti-scale technology
- Integrated diverter
- 8-5/8" Projection
- Total height 12-1/4"
- Height to aerator/spout outlet 8-1/2"
- Spout hole diameter 1-1/4"
- Hole diameter single-lever mixer 1-3/8"
- Hole diameter for hand shower set 1-1/4"
- 2-1/8" diameter flange for spout
- Mixer with flange Ø 2-1/8"
- Hand shower set with flange Ø 2-3/8"
- Metal shower hose 68-7/8" with anti-twist device

Internal backflow preventer.

NOTE: Local building codes may require the use of an anti-scald device. Please refer to remote pressure balance valve (35 914 970 90)

| | |
|---|---|
| Chrome | 27 632 404-00 |
| Brushed Platinum | 27 632 404-06 |
| Dark Chrome | 27 632 404-19 |
| Brushed Durabrass (23kt Gold) | 27 632 404-28 |
| Brushed Dark Brass (PVD) | 27 632 404-39 |
| Brushed Bronze (PVD) | 27 632 404-42 |
| Brushed Dark Bronze (PVD) | 27 632 404-43 |
| Brushed Champagne (22kt Gold) | 27 632 404-46 |
| Champagne (22kt Gold) | 27 632 404-47 |
| Brushed Dark Platinum | 27 632 404-99 |

# COYA Deck-mounted tub mixer, with hand shower set for deck-mounted tub installation - Chrome

COYA

27 632 404 Product version from 1/1/2026

mm [inches]

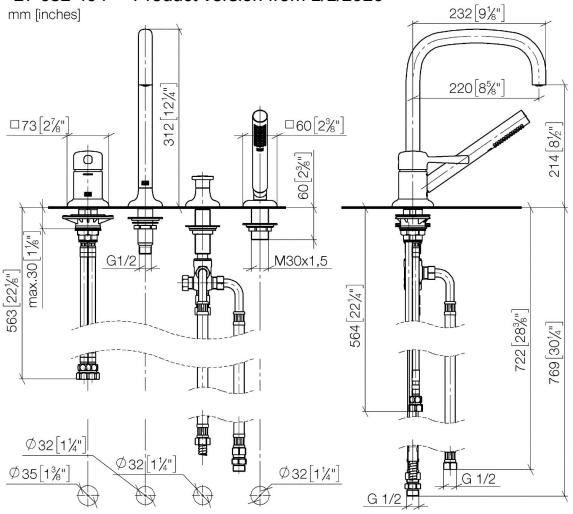


## Flow rate chart

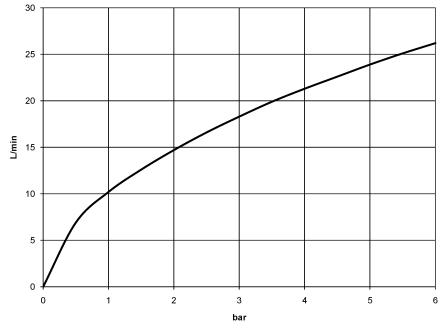


## Codes & Standards

| | | | |
|---|---|---|---|
| ASME A112.18.1 | cUPC | DIN 4109 | EN 1717 |
| ISO 3822 | Ü-Zeichen | | |

# COYA Deck-mounted tub mixer, with hand shower set for deck-mounted tub installation - Chrome

27 632 404 Product version from 1/1/2026

## Certificates and sustainability

| | | | |
|---|---|---|---|
| LGA_38 | Belgaqua_25-341-2 | EPD-DOR-20230287 -IBA1-EN Environmental.product-declarat | IAPMO_4976 ( |

# COYA Deck-mounted tub mixer, with hand shower set for deck-mounted tub installation - Chrome



27 632 404 Product version from 1/1/2026

Parts for other finishes can be found here: Brushed Platinum

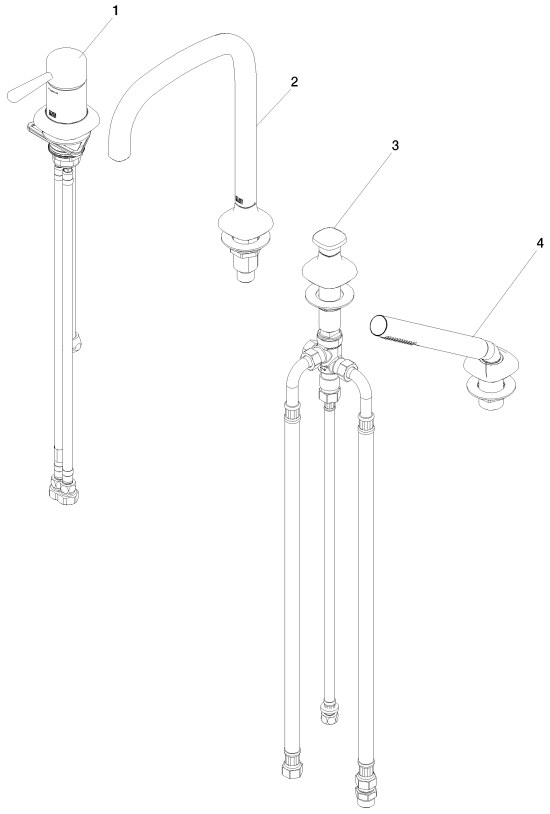


## Spare parts list

| Number | Item Number | Designation | Number of units | Lead time |
|---|---|---|---|---|
| 4 | 90 12 11 140 42-00 | shower set | 1.00 | 26 |
| 3 | 90 20 40 006 02-00 | handle | 1.00 | 82 |
| 2 | 90 28 22 139 00-00 | spout | 1.00 | 82 |
| 1 | 90 20 40 005 01-00 | handle | 1.00 | 82 |