DORN BRACHT

Five hole tub set for deck-mounted tub installation with diverter

COYA

27 522 424 Product version from 1/1/2026



- Spout: Round aerated stream
- Water flow rate limited to max. 5.4 gpm
- Hand-held shower: COMPACT RAIN, flow rate max. 1.8 gpm (at 3 bar)
- Hand shower set with anti-scale technology
- 8-5/8" Projection
- Integrated diverter
- Total height 12-1/4"
- Height to aerator/spout outlet 8-1/2"
- Valve hole diameter 1-1/4"
- Spout hole diameter 1-1/4"
- Hole diameter for hand shower set 1-1/4"
- Hand shower set with flange Ø 2-3/8"
- 2-1/8" diameter flange for spout
- Valve with flange Ø 2-3/8"
- Metal shower hose 68-7/8" with anti-twist device

Internal backflow preventer.

NOTE: Local building codes may require the use of an anti-scald device. Please refer to remote pressure balance valve (35 914 970 90)

Chrome	27 522 424-00
Brushed Platinum	27 522 424-06
Dark Chrome	27 522 424-19
Brushed Durabrass (23kt Gold)	27 522 424-28
Brushed Dark Brass (PVD)	27 522 424-39
Brushed Bronze (PVD)	27 522 424-42
Brushed Dark Bronze (PVD)	27 522 424-43
Brushed Champagne (22kt Gold)	27 522 424-46
Champagne (22kt Gold)	27 522 424-47
Brushed Dark Platinum	27 522 424-99

DORN BRACHT

Five hole tub set for deck-mounted tub installation with diverter

COYA

27 522 424 Product version from 1/1/2026

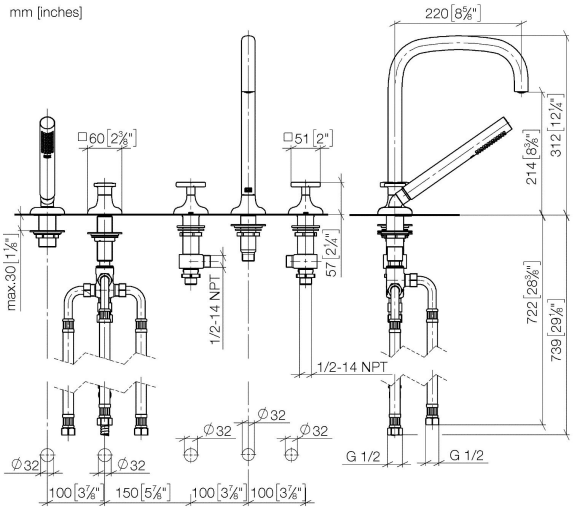

Codes & Standards

ASME A112.18.1	cUPC	DIN 4109	EN 1717
ISO 3822	Ü-Zeichen		

Certificates and sustainability

LGA_29	Belgaqua_25-341-2	EPD-DOR-20230287 IAPMO_4976 (-IBA1-EN Environmental.product-declarat

Five hole tub set for deck-mounted tub installation with diverter

COYA

27 522 424 Product version from 1/1/2026

Parts for other finishes can be found here: Brushed Platinum

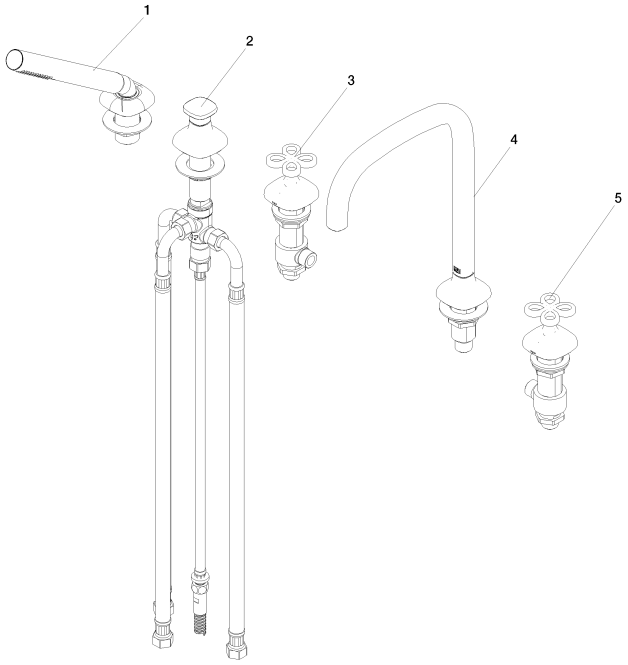

Spare parts list

Number	Item Number	Designation	Number of units	Lead time
1	90 12 11 140 42-00	shower set	1.00	26
2	90 20 40 006 00-00	diverter	1.00	82
4	90 28 22 139 00-00	spout	1.00	82
5	90 20 40 010 02-00	handle	1.00	82
3	90 20 40 010 01-00	handle	1.00	82