Two-hole tub mixer for freestanding installation with hand shower set

COYA

25 943 424 Product version from 1/1/2026



- Spout: Round aerated stream
- Water flow rate limited to max. 6.5 gpm
- Hand-held shower: COMPACT RAIN, flow rate max. 1.8 gpm (at 3 bar)
- Hand shower with descaling system
- 11" Projection
- Swiveling spout 360°
- Tub / shower diverter
- Total height 37-1/4"
- Riser height 26"
- Height to aerator/spout outlet 32-7/8"
- Flanges Ø 3-7/8"
- Center to center mounts 5-7/8"
- Metal shower hose 49-1/4" with anti-twist device
- Hand shower to be mounted on right pillar

Internal backflow preventer.

NOTE: Local building codes may require the use of an anti-scald device. Please refer to remote pressure balance valve (35 914 970 90)

Internal backflow preventer.

NOTE: Local building codes may require the use of an anti-scald device. Please refer to remote pressure balance valve (35 914 970 90)

Chrome	25 943 424-00
Brushed Platinum	25 943 424-06
Dark Chrome	25 943 424-19
Brushed Durabrass (23kt Gold)	25 943 424-28
Brushed Dark Brass (PVD)	25 943 424-39
Brushed Bronze (PVD)	25 943 424-42
Brushed Dark Bronze (PVD)	25 943 424-43
Brushed Champagne (22kt Gold)	25 943 424-46
Champagne (22kt Gold)	25 943 424-47
Brushed Dark Platinum	25 943 424-99

Required article



Floor mounting rough set - 35 951 970-90 0010
- Min. rough in depth 3-1/8"
- Max. rough in depth 6-1/4"

DORN BRACHT

Two-hole tub mixer for freestanding installation with hand shower set

COYA

25 943 424 Product version from 1/1/2026

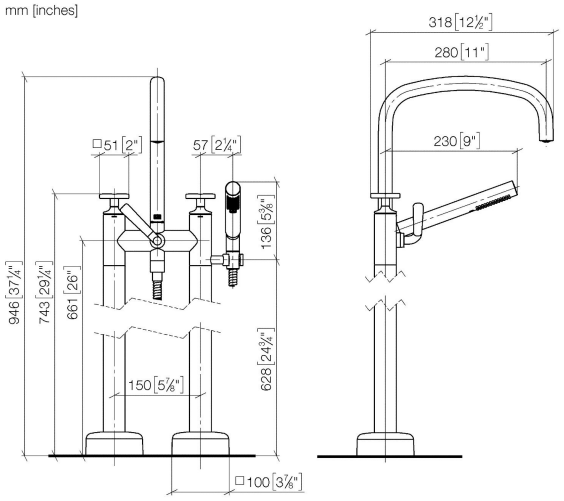

Codes & Standards

ASME A112.18.1	cUPC	DIN 4109	EN 1717
ISO 3822	Ü-Zeichen		

Certificates and sustainability

LGA_29	Belgaqua_25-339-2	EPD-DOR-20230287 IAPMO_4976 (-IBA1-EN Environmental.product-declarat

DORN BRACHT

Two-hole tub mixer for freestanding installation with hand shower set

COYA

25 943 424 Product version from 1/1/2026

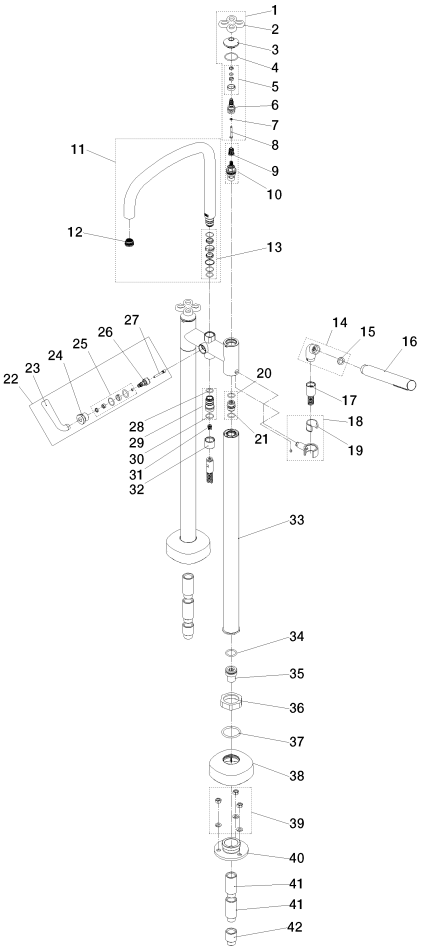

DORN BRACHT

Two-hole tub mixer for freestanding installation with hand shower set

COYA

25 943 424 Product version from 1/1/2026

Spare parts list

Number	Item Number	Designation	Number of units	Lead time
29	90 24 03 543 00 90	nipple	1.00	14
16	90 12 11 140 41-00	shower	1.00	26
39	04 23 10 023 00 90	fixing set	1.00	14
15	90 14 20 002 00 90	seal	1.00	14
9	90 12 12 002 00 90	fixing cap	2.00	14
33	90 28 22 480 00-00	connection	2.00	26
5	90 14 15 028 00 90	ring	2.00	14
23	90 20 40 001 02-00	handle	1.00	26
41	09 24 03 081 10 90	extension	4.00	14
11	90 28 22 073 00-00	spout	1.00	26
34	09 14 10 081 90	seal	2.00	14
10	90 90 03 131 00 90	top	2.00	14
21	90 14 10 055 00 90	seal	4.00	14
20	90 29 05 037 00 90	nipple	2.00	14
1	90 20 40 010 05-00	handle	2.00	26
12	09 29 03 124 90	aerator	1.00	14
2	90 20 40 010 00-00	handle	2.00	26
24	90 24 03 544 00-00	nut	1.00	26
38	90 27 40 011 00-00	rosette	2.00	26
25	90 14 10 216 00 90	set	1.00	14
3	09 27 80 017-00	rosette	2.00	26
30	09 14 10 096 90	seal	3.00	14
26	90 15 01 136 00 90	excenter	1.00	14
19	90 18 40 035 00 90	sleeve	1.00	14
27	90 30 30 201 00 90	screw	1.00	14
36	09 23 30 040-07	nut	2.00	54
6	09 29 06 120 90	spindle	2.00	14
31	09 23 01 131 90	back-flow preventer	1.00	14
42	09 24 03 080 90	extension	2.00	14
17	90 30 02 072 00-00	Metal shower hose 1/2" x 3/8" x 49-1/4" - Chrome	1.00	26
22	90 20 40 001 07-00	handle	1.00	26
18	90 17 20 028 01-00	holder	1.00	26
40	09 30 11 130-07	connection	2.00	54
7	09 30 11 194 90	disc	2.00	14
32	09 21 02 143-00	sleeve	1.00	26
37	09 14 10 041 90	seal	2.00	14
13	90 28 10 172 00 90	set	1.00	14
8	09 30 30 158 90	screw	2.00	14
28	90 14 10 033 00 90	seal	4.00	14
4	09 14 10 137 90	seal	2.00	14
14	04 24 04 189 00-00	nipple	1.00	26
35	90 24 03 094 00 90	nipple	2.00	26