COYA Two-hole tub mixer for freestanding installation with hand shower set - Chrome

COYA

25 943 414 Product version from 1/1/2026



- Spout: Round aerated stream
- Water flow rate limited to max. 6.5 gpm
- Hand-held shower: COMPACT RAIN, flow rate max. 1.8 gpm (at 3 bar)
- Hand shower with descaling system
- 11" Projection
- Swiveling spout 360°
- Tub / shower diverter
- Total height 37-1/4"
- Riser height 26"
- Height to aerator/spout outlet 32-7/8"
- Flanges Ø 3-7/8"
- Center to center mounts 5-7/8"
- Metal shower hose 49-1/4" with anti-twist device
- Hand shower to be mounted on right pillar

Internal backflow preventer.

(ADA)

NOTE: Local building codes may require the use of an anti-scald device. Please refer to remote pressure balance valve (35 914 970 90)

Internal backflow preventer.

(ADA)

NOTE: Local building codes may require the use of an anti-scald device. Please refer to remote pressure balance valve (35 914 970 90)

Chrome	25 943 414-00
Brushed Platinum	25 943 414-06
Dark Chrome	25 943 414-19
Brushed Durabrass (23kt Gold)	25 943 414-28
Brushed Dark Brass (PVD)	25 943 414-39
Brushed Bronze (PVD)	25 943 414-42
Brushed Dark Bronze (PVD)	25 943 414-43
Brushed Champagne (22kt Gold)	25 943 414-46
Champagne (22kt Gold)	25 943 414-47
Brushed Dark Platinum	25 943 414-99

Required article



Floor mounting rough set - 35 951 970-90 0010
- Min. rough in depth 3-1/8"
- Max. rough in depth 6-1/4"

COYA Two-hole tub mixer for freestanding installation with hand shower set - Chrome

COYA

25 943 414 Product version from 1/1/2026

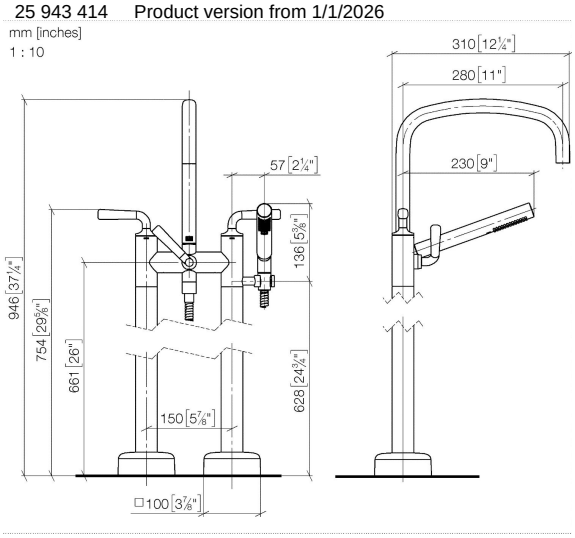

Flow rate chart

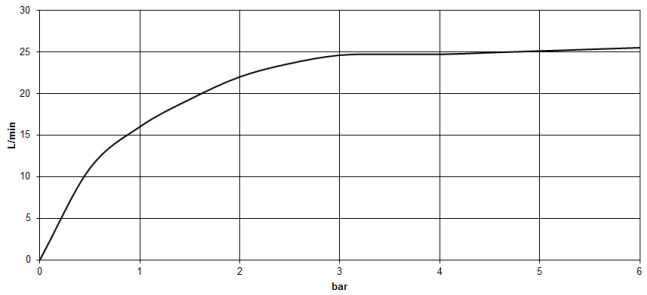

Codes & Standards

ASME A112.18.1	cUPC	DIN 4109	EN 1717
ISO 3822	Ü-Zeichen		

Certificates and sustainability

LGA_29	Belgaqua_25-339-2	EPD-DOR-20230287 -IBA1-EN Environmental.product-declarat	IAPMO_4976 (

COYA Two-hole tub mixer for freestanding installation with hand shower set - Chrome

25 943 414 Product version from 1/1/2026

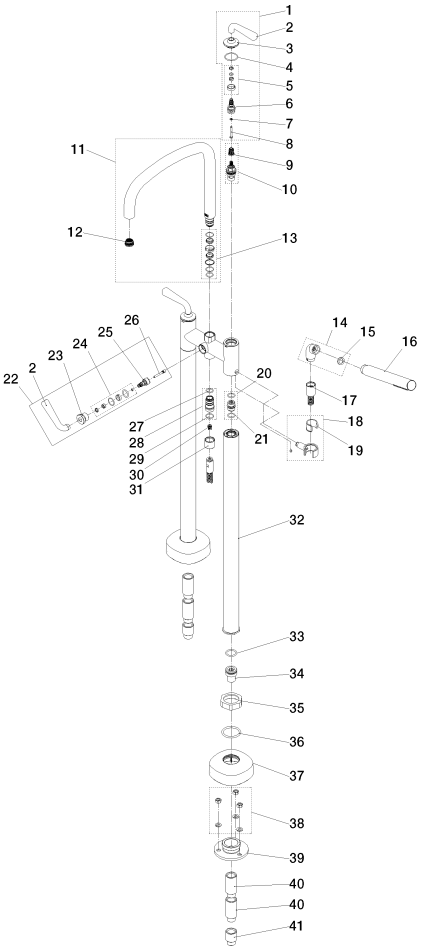

DORN BRACHT

COYA Two-hole tub mixer for freestanding installation with hand shower set - Chrome

25 943 414 Product version from 1/1/2026

Spare parts list

Number	Item Number	Designation	Number of units	Lead time
18	90 17 20 028 01-00	holder	1.00	26
8	09 30 30 158 90	screw	2.00	14
19	90 18 40 035 00 90	sleeve	1.00	14
22	90 20 40 001 07-00	handle	1.00	26
33	09 14 10 081 90	seal	2.00	14
32	90 28 22 480 00-00	connection	2.00	26
15	90 14 20 002 00 90	seal	1.00	14
35	09 23 30 040-07	nut	2.00	54
38	04 23 10 023 00 90	fixing set	1.00	14
28	90 24 03 543 00 90	nipple	1.00	14
17	90 30 02 072 00-00	Metal shower hose 1/2" x 3/8" x 49-1/4" - Chrome	1.00	26
4	09 14 10 137 90	seal	2.00	14
9	90 12 12 002 00 90	fixing cap	2.00	14
31	09 21 02 143-00	sleeve	1.00	26
27	90 14 10 033 00 90	seal	4.00	14
39	09 30 11 130-07	connection	2.00	54
40	09 24 03 081 10 90	extension	4.00	14
25	90 15 01 136 00 90	excenter	1.00	14
7	09 30 11 194 90	disc	2.00	14
14	04 24 04 189 00-00	nipple	1.00	26
11	90 28 22 073 00-00	spout	1.00	26
1	90 20 40 001 10-00	handle	2.00	82
29	09 14 10 096 90	seal	3.00	14
5	90 14 15 028 00 90	ring	2.00	14
20	90 29 05 037 00 90	nipple	2.00	14
30	09 23 01 131 90	back-flow preventer	1.00	14
36	09 14 10 041 90	seal	2.00	14
10	90 90 03 131 00 90	top	2.00	14
12	09 29 03 124 90	aerator	1.00	14
16	90 12 11 140 41-00	shower	1.00	26
41	09 24 03 080 90	extension	2.00	14
23	90 24 03 544 00-00	nut	1.00	26
21	90 14 10 055 00 90	seal	4.00	14
13	90 28 10 172 00 90	set	1.00	14
37	90 27 40 011 00-00	rosette	2.00	26
3	09 27 80 017-00	rosette	2.00	26
2	90 20 40 001 02-00	handle	3.00	26
6	09 29 06 120 90	spindle	2.00	14
26	90 30 30 201 00 90	screw	1.00	14
24	90 14 10 216 00 90	set	1.00	14
34	90 24 03 094 00 90	nipple	2.00	26

Model/program/technical modifications and error excepted
For more information see: www.dornbracht.com + 49 (0) 2371 8899 900 mail@dornbracht.com