COYA Two-hole tub mixer for freestanding installation with hand shower set - Chrome

COYA

25 943 404 Product version from 9/1/2025



- Spout: Round aerated stream
- Water flow rate limited to max. 6.5 gpm
- Hand-held shower: COMPACT RAIN, flow rate max. 1.8 gpm (at 3 bar)
- Hand shower with descaling system
- 11" Projection
- Swiveling spout 360°
- Tub / shower diverter
- Total height 37-1/4"
- Riser height 26"
- Height to aerator/spout outlet 32-7/8"
- Flanges Ø 3-7/8"
- Center to center mounts 5-7/8"
- Metal shower hose 49-1/4" with anti-twist device
- Hand shower to be mounted on right pillar

Internal backflow preventer.

NOTE: Local building codes may require the use of an anti-scald device. Please refer to remote pressure balance valve (35 914 970 90)

Internal backflow preventer.

NOTE: Local building codes may require the use of an anti-scald device. Please refer to remote pressure balance valve (35 914 970 90)

Chrome	25 943 404-00
Brushed Platinum	25 943 404-06
Dark Chrome	25 943 404-19
Brushed Durabrass (23kt Gold)	25 943 404-28
Brushed Dark Brass (PVD)	25 943 404-39
Brushed Bronze (PVD)	25 943 404-42
Brushed Dark Bronze (PVD)	25 943 404-43
Brushed Champagne (22kt Gold)	25 943 404-46
Champagne (22kt Gold)	25 943 404-47
Brushed Dark Platinum	25 943 404-99

Required article



Floor mounting rough set - 35 951 970-90 0010
- Min. rough in depth 3-1/8"
- Max. rough in depth 6-1/4"

COYA Two-hole tub mixer for freestanding installation with hand shower set - Chrome

25 943 404 Product version from 9/1/2025

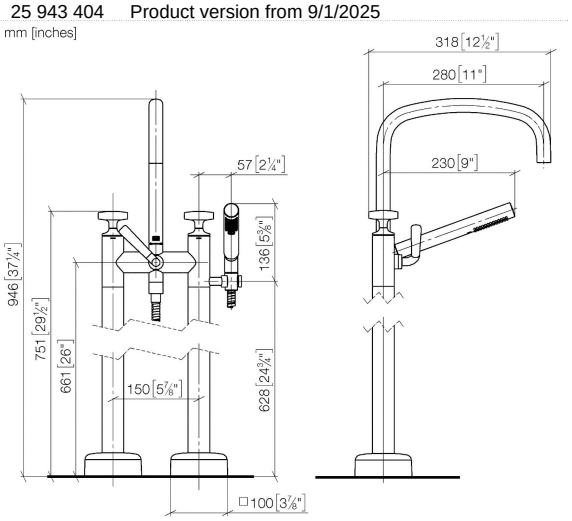

Flow rate chart

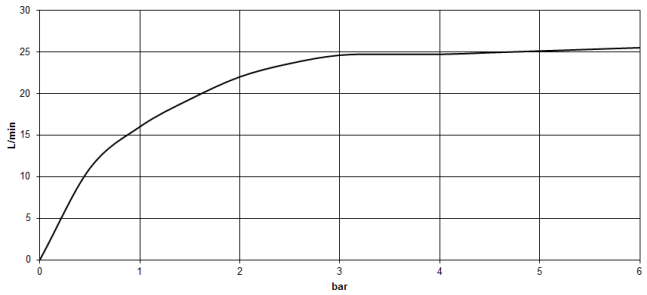

Codes & Standards

ASME A112.18.1	cUPC	DIN 4109	EN 1717
ISO 3822	Ü-Zeichen		

Certificates and sustainability

LGA_29	Belgaqua_25-339-2	EPD-DOR-20230287 -IBA1-EN Environmental.product-declarat	IAPMO_4976 (

COYA Two-hole tub mixer for freestanding installation with hand shower set - Chrome

25 943 404 Product version from 9/1/2025

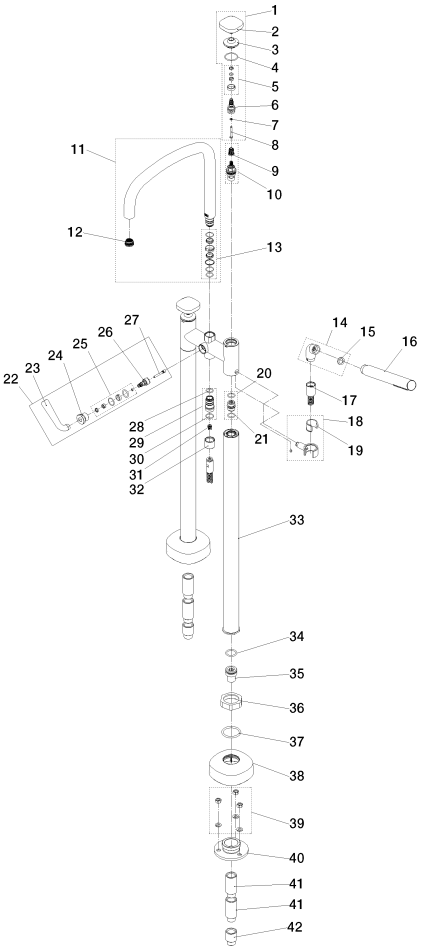

DORN BRACHT

COYA Two-hole tub mixer for freestanding installation with hand shower set - Chrome

25 943 404 Product version from 9/1/2025

Spare parts list

Number	Item Number	Designation	Number of units	Lead time
17	90 30 02 072 00-00	Metal shower hose 1/2" x 3/8" x 49-1/4" - Chrome	1.00	26
22	90 20 40 001 07-00	handle	1.00	26
1	90 20 40 003 07-00	handle	2.00	26
32	09 21 02 143-00	sleeve	1.00	26
41	09 24 03 081 10 90	extension	4.00	14
34	09 14 10 081 90	seal	2.00	14
8	09 30 30 158 90	screw	2.00	14
26	90 15 01 136 00 90	excenter	1.00	14
28	90 14 10 033 00 90	seal	4.00	14
11	90 28 22 073 00-00	spout	1.00	26
29	90 24 03 543 00 90	nipple	1.00	14
13	90 28 10 172 00 90	set	1.00	14
33	90 28 22 480 00-00	connection	2.00	26
9	90 12 12 002 00 90	fixing cap	2.00	14
36	09 23 30 040-07	nut	2.00	54
3	09 27 80 017-00	rosette	2.00	26
21	90 14 10 055 00 90	seal	4.00	14
38	90 27 40 011 00-00	rosette	2.00	26
37	09 14 10 041 90	seal	2.00	14
10	90 90 03 131 00 90	top	2.00	14
23	90 20 40 001 02-00	handle	1.00	26
42	09 24 03 080 90	extension	2.00	14
12	09 29 03 124 90	aerator	1.00	14
24	90 24 03 544 00-00	nut	1.00	26
7	09 30 11 194 90	disc	2.00	14
2	90 20 40 003 02-00	handle	2.00	26
4	09 14 10 137 90	seal	2.00	14
20	90 29 05 037 00 90	nipple	2.00	14
30	09 14 10 096 90	seal	3.00	14
25	90 14 10 216 00 90	set	1.00	14
6	09 29 06 120 90	spindle	2.00	14
16	90 12 11 140 41-00	shower	1.00	26
27	90 30 30 201 00 90	screw	1.00	14
15	90 14 20 002 00 90	seal	1.00	14
35	90 24 03 094 00 90	nipple	2.00	26
14	04 24 04 189 00-00	nipple	1.00	26
39	04 23 10 023 00 90	fixing set	1.00	14
19	90 18 40 035 00 90	sleeve	1.00	14
5	90 14 15 028 00 90	ring	2.00	14
18	90 17 20 028 01-00	holder	1.00	26
31	09 23 01 131 90	back-flow preventer	1.00	14
40	09 30 11 130-07	connection	2.00	54