CYO Single-lever tub mixer with stand pipe for freestanding installation with hand shower set - Chrome

CYO

25 863 811



- 9-3/4" Projection
- Rectangular aerated stream
- Spout flow rate max. 7 gpm
- Hand-held shower: COMPACT RAIN, flow rate max. 1.8 gpm (at 3 bar)
- Baton hand shower with descaling system
- Hand shower bracket
- Integrated diverter
- Total height 38-5/8" - 41-3/8"
- Lower body height 23-1/2" - 26-1/4"
- Height to aerator/spout outlet 35-1/2" - 38-1/4"
- Flange 5-1/8" x 5-1/8"
- Metal shower hose 49-1/4" with anti-twist device

NOTE: Local building codes may require the use of an anti-scald device. Please refer to remote pressure balance valve (35 914 970 90)

NOTE: Local building codes may require the use of an anti-scald device. Please refer to remote pressure balance valve (35 914 970 90)

Chrome	25 863 811-00
Brushed Platinum	25 863 811-06
Dark Chrome	25 863 811-19
Brushed Durabrass (23kt Gold)	25 863 811-28
Brushed Dark Platinum	25 863 811-99

Required article



Floor mounting rough set -
●Max. rough in depth 5-7/8"
●Min. rough in depth 3-1/8"

35 949 970-90 0010

DORN BRACHT

CYO Single-lever tub mixer with stand pipe for freestanding installation with hand shower set - Chrome

CYO

25 863 811

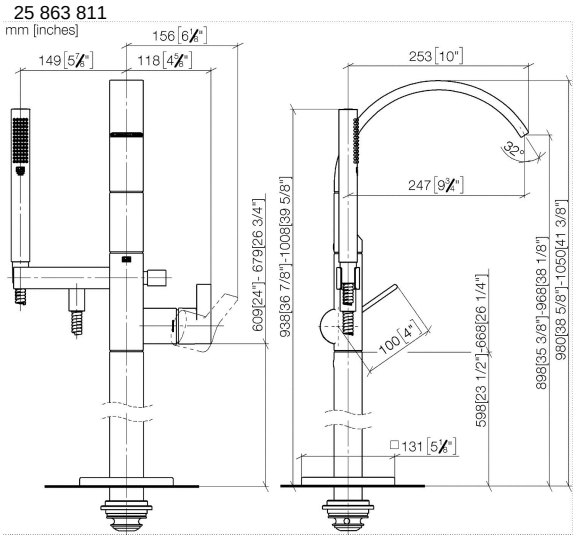

Flow rate chart

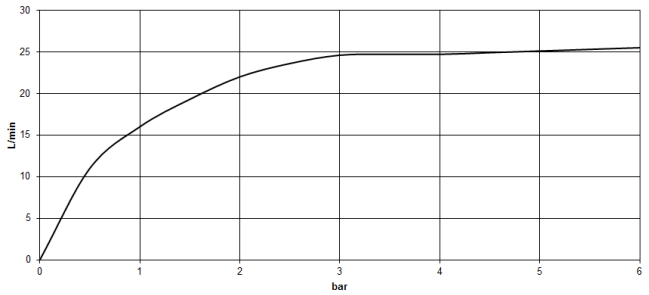

Codes & Standards

ASME A112.18.1	California Energy Commission (CEC)	cUPC	DIN 4109
EN 1717	ISO 3822	Scottish Water Byelaws	UK Water Supply Regulations

Ü-Zeichen

CYO Single-lever tub mixer with stand pipe for freestanding installation with hand shower set - Chrome

25 863 811

Certificates and sustainability

IAPMO_4976	LGA_38	WRAS_2201	Belgaqua_21-376-2	EPD-DOR-20230287-IBA1-EN Environmental.product-declarat

CYO Single-lever tub mixer with stand pipe for freestanding installation with hand shower set - Chrome

25 863 811

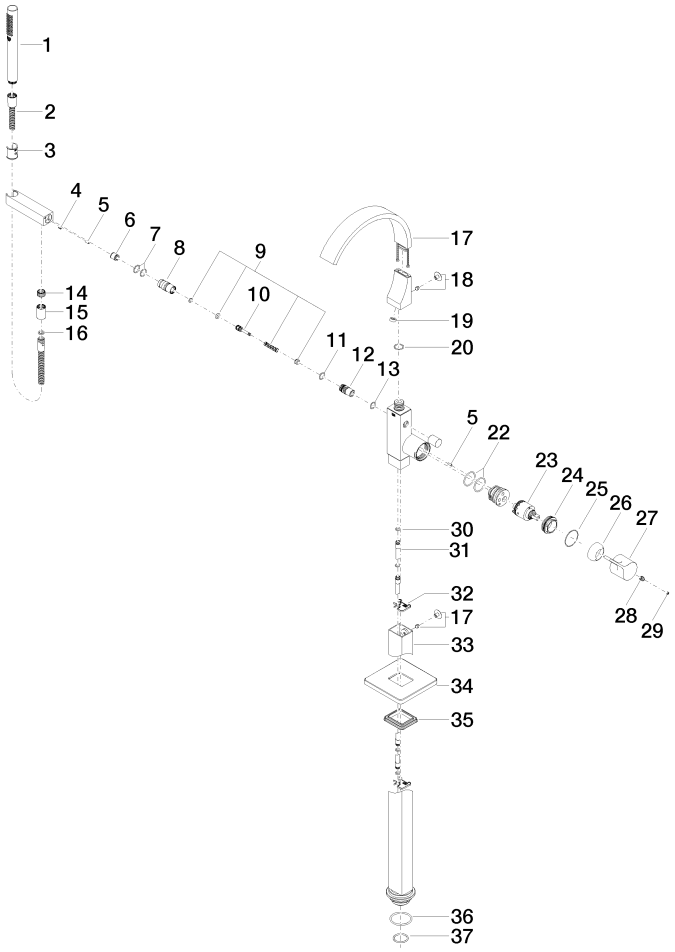

DORN BRACHT

CYO Single-lever tub mixer with stand pipe for freestanding installation with hand shower set - Chrome

CYO

25 863 811

Spare parts list

Number	Item Number	Designation	Number of units	Lead time
5	09 31 11 040 90	pin	3.00	14
4	09 31 11 058 90	pin	1.00	14
12	09 21 34 080-00	nipple	1.00	26
20	09 14 10 031 90	seal	2.00	14
2	90 30 02 072 00-00	Metal shower hose 1/2" x 3/8" x 49-1/4" - Chrome	1.00	26
17	90 11 70 011 00-00	spout	1.00	26
8	09 24 03 130-00	nipple	1.00	26
3	09 18 40 118 90	sleeve	1.00	14
14	09 24 03 069 90	nipple	1.00	14
19	09 23 01 057 90	flow reducer	1.00	14
10	09 31 09 094 20-00	pull-rod	1.00	26
18	04 31 20 034 00 90	plug	2.00	14
9	90 16 02 023 00 90	spring	1.00	14
15	90 21 02 069 00-00	cover	1.00	26
6	90 23 01 141 00 90	back-flow preventer	1.00	14
11	90 14 10 055 00 90	seal	1.00	14
7	90 14 10 010 00 90	seal	2.00	14
13	90 14 10 033 00 90	seal	1.00	14
16	90 14 20 026 00 90	seal	1.00	14
1	90 12 11 140 41-00	shower	1.00	26
33	04 28 22 024 00-00	pipe	1.00	26
35	09 14 03 107 90	seal	1.00	14
23	90 15 05 039 00 90	cartridge	1.00	14
30	09 14 10 139 90	seal	4.00	14
34	09 27 71 011-00	rosette	1.00	26
32	09 20 93 051 90	holder	2.00	14
26	09 28 30 036-00	cover	1.00	26
29	90 31 20 087 00-00	plug	1.00	26
25	09 14 10 037 90	seal	1.00	14
24	09 24 04 298 90	nut	1.00	14
36	09 14 10 084 90	seal	1.00	14
37	09 14 10 018 90	seal	1.00	14
31	04 28 22 025 00 90	connection	2.00	14
22	09 14 10 148 90	seal	1.00	14
28	90 31 11 030 00 90	pin	1.00	14
27	90 20 80 073 00-00	handle	1.00	26