VAIA Single-lever tub mixer with stand pipe for freestanding installation with hand shower set - Chrome

VAIA

25 863 809 Product version from 4/1/2025



- Spout: Round aerated stream
- Water flow rate limited to max. 6.5 gpm
- Hand-held shower: COMPACT RAIN, flow rate max. 1.8 gpm (at 3 bar)
- Baton hand shower with descaling system
- 11-1/4" Projection
- Swiveling spout 360°
- Integrated diverter
- Total height 41-5/8" - 44-3/8"
- Hand shower bracket
- Lower body height 22-1/4" - 25"
- Height to aerator/spout outlet 36-3/8" - 39-1/8"
- Flanges Ø 5-3/8"
- Metal shower hose 49-1/4" with anti-twist device

NOTE: Local building codes may require the use of an anti-scald device. Please refer to remote pressure balance valve (35 914 970 90) Internal backflow preventer.

NOTE: Local building codes may require the use of an anti-scald device. Please refer to remote pressure balance valve (35 914 970 90)

Internal backflow preventer.

Chrome	25 863 809-00
Brushed Platinum	25 863 809-06
Platinum	25 863 809-08
Dark Chrome	25 863 809-19
Brushed Durabrass (23kt Gold)	25 863 809-28
Brushed Dark Brass (PVD)	25 863 809-39
Brushed Bronze (PVD)	25 863 809-42
Brushed Dark Bronze (PVD)	25 863 809-43
Brushed Champagne (22kt Gold)	25 863 809-46
Champagne (22kt Gold)	25 863 809-47
Brushed Dark Platinum	25 863 809-99

Required article



Floor mounting rough set - 35 949 970-90
- Min. rough in depth 3-1/8"
- Max. rough in depth 5-7/8"

0010

VAIA Single-lever tub mixer with stand pipe for freestanding installation with hand shower set - Chrome

25 863 809 Product version from 4/1/2025

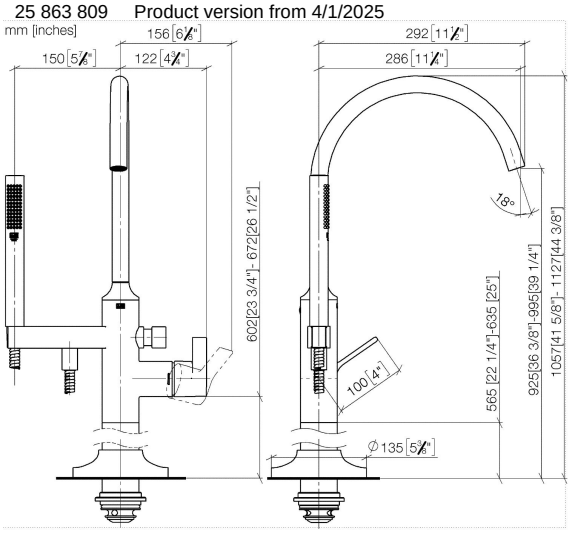

Flow rate chart

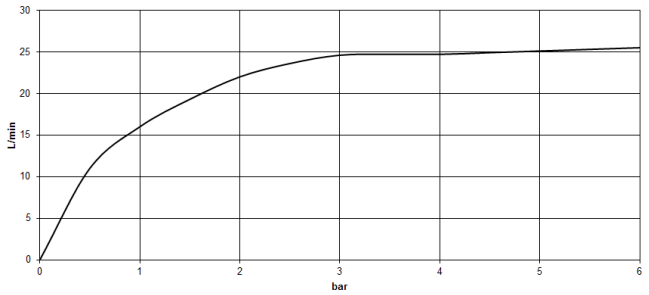

Codes & Standards

ASME A112.18.1	California Energy Commission (CEC)	cUPC	DIN 4109
EN 1717	ISO 3822	Scottish Water Byelaws	UK Water Supply Regulations

Ü-Zeichen

VAIA Single-lever tub mixer with stand pipe for freestanding installation with hand shower set - Chrome

25 863 809 Product version from 4/1/2025

Certificates and sustainability

IAPMO_4976 Belgaqua_19_77 Belgaqua_24-003-2 WRAS_250502 LGA_39

EPD-DOR-20230287-IBA1-EN Environmental.product-declarat

DORN BRACHT

VAIA Single-lever tub mixer with stand pipe for freestanding installation with hand shower set - Chrome

25 863 809 Product version from 4/1/2025

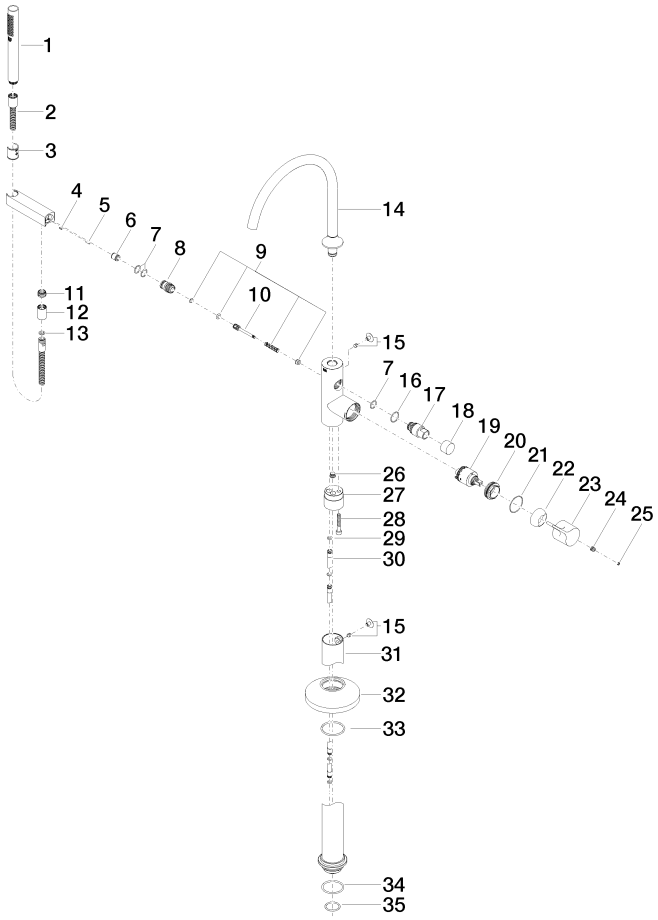

DORN BRACHT

VAIA Single-lever tub mixer with stand pipe for freestanding installation with hand shower set - Chrome

25 863 809 Product version from 4/1/2025

Spare parts list

Number	Item Number	Designation	Number of units	Lead time
28	09 30 30 111 90	screw	1.00	14
34	09 14 10 084 90	seal	1.00	14
29	09 14 10 139 90	seal	2.00	14
18	09 20 88 002-00	handle	1.00	26
17	09 21 34 081 20-00	nipple	1.00	26
22	09 28 30 036-00	cover	1.00	26
8	09 24 03 153 20-00	nipple	1.00	26
9	90 16 02 023 00 90	spring	1.00	14
25	90 31 20 087 00-00	plug	1.00	26
19	90 15 05 039 00 90	cartridge	1.00	14
32	09 27 80 022-00	rosette	1.00	26
30	04 28 22 025 00 90	connection	2.00	14
20	09 24 04 298 90	nut	1.00	14
11	09 24 03 069 90	nipple	1.00	14
27	09 24 03 152 20-00	adaptor	1.00	82
5	09 31 11 040 90	pin	1.00	14
14	90 28 22 327 00-00	spout	1.00	26
3	09 18 40 118 90	sleeve	1.00	14
21	09 14 10 037 90	seal	1.00	14
10	09 31 09 102 20-00	pull-rod	1.00	26
15	04 31 20 036 00 90	plug	2.00	14
4	09 31 11 058 90	pin	1.00	14
2	90 30 02 072 00-00	Metal shower hose 1/2" x 3/8" x 49-1/4" - Chrome	1.00	26
35	09 14 10 018 90	seal	1.00	14
16	09 14 10 112 90	seal	1.00	14
31	04 28 22 030 00-00	pipe	1.00	26
33	90 14 10 129 00 90	seal	1.00	14
6	90 23 01 141 00 90	back-flow preventer	1.00	14
7	90 14 10 010 00 90	seal	3.00	14
24	90 31 11 030 00 90	pin	1.00	14
26	04 31 20 039 11 90	plug	1.00	14
13	90 14 20 026 00 90	seal	1.00	14
12	90 21 02 069 00-00	cover	1.00	26
1	90 12 11 140 41-00	shower	1.00	26
23	90 20 80 073 00-00	handle	1.00	26