CL.1 Single-lever tub mixer with stand pipe for freestanding installation with hand shower set - Chrome

CL.1

25 863 705 Product version from 7/1/2023



- 9-3/8" Projection
- Rectangular aerator with 55 individual streams
- Spout flow rate max. 6.5 gpm
- Hand-held shower: COMPACT RAIN, flow rate max. 1.8 gpm (at 3 bar)
- Baton hand shower with descaling system
- Hand shower bracket
- Integrated diverter
- Total height 36-3/4" - 39-5/8"
- Lower body height 23-1/2" - 26-1/4"
- Height to aerator/spout outlet 33-1/2" - 36-1/4"
- Flange 5-1/8" x 5-1/8"
- Metal shower hose 49-1/4" with anti-twist device

NOTE: Local building codes may require the use of an anti-scald device. Please refer to remote pressure balance valve (35 914 970 90)

NOTE: Local building codes may require the use of an anti-scald device. Please refer to remote pressure balance valve (35 914 970 90)

Chrome	25 863 705-00
Brushed Platinum	25 863 705-06
Dark Chrome	25 863 705-19
Brushed Champagne (22kt Gold)	25 863 705-46
Champagne (22kt Gold)	25 863 705-47
Brushed Dark Platinum	25 863 705-99

Required article



Floor mounting rough set - 35 949 970-90
●Max. rough in depth 5-7/8" 0010
●Min. rough in depth 3-1/8"

CL.1 Single-lever tub mixer with stand pipe for freestanding installation with hand shower set - Chrome

25 863 705 Product version from 7/1/2023

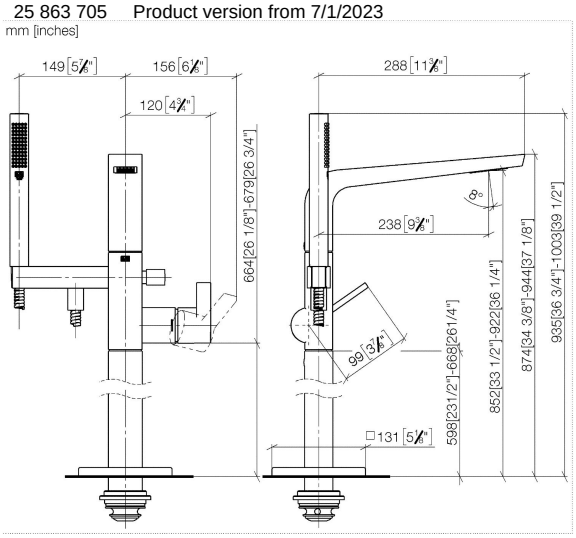

Flow rate chart

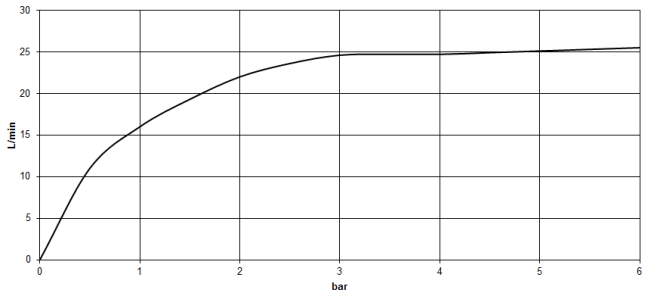

Codes & Standards

ASME A112.18.1	California Energy Commission (CEC)	cUPC	DIN 4109
EN 1717	ISO 3822	Ü-Zeichen	

CL.1 Single-lever tub mixer with stand pipe for freestanding installation with hand shower set - Chrome

25 863 705 Product version from 7/1/2023

Certificates and sustainability

IAPMO_4976	Belgaqua_19_77	LGA_29	Belgaqua_24-003-2	EPD-DOR-20230287-IBA1-EN Environmental.product-declarat

CL.1 Single-lever tub mixer with stand pipe for freestanding installation with hand shower set - Chrome

25 863 705 Product version from 7/1/2023

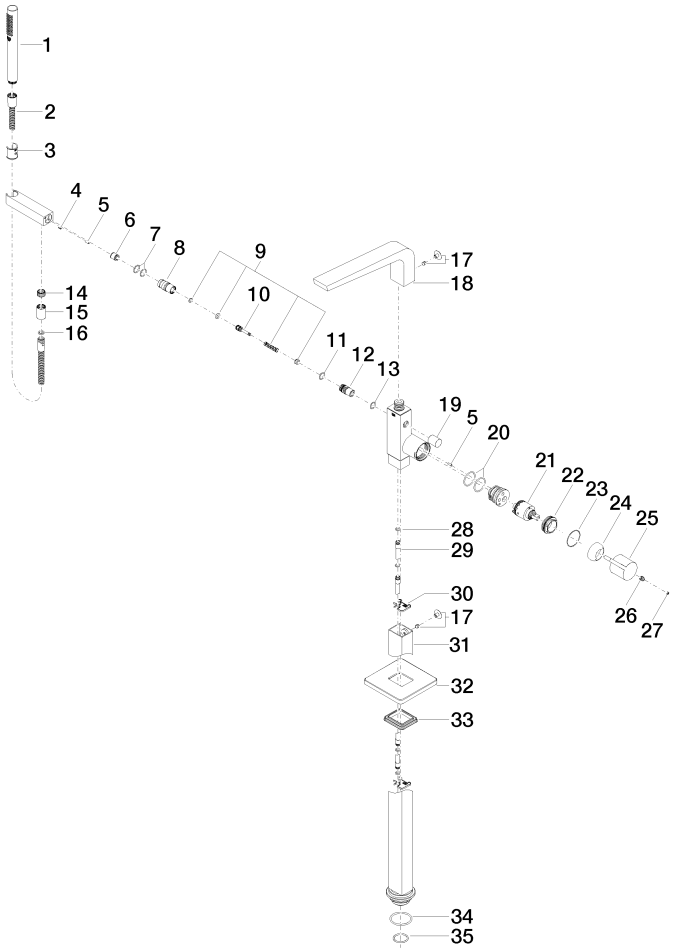

DORN BRACHT

CL.1 Single-lever tub mixer with stand pipe for freestanding installation with hand shower set - Chrome

25 863 705 Product version from 7/1/2023

Spare parts list

Number	Item Number	Designation	Number of units	Lead time
2	90 30 02 072 00-00	Metal shower hose 1/2" x 3/8" x 49-1/4" - Chrome	1.00	26
9	90 16 02 023 00 90	spring	1.00	14
31	04 28 22 024 00-00	pipe	1.00	26
10	09 31 09 094 20-00	pull-rod	1.00	26
29	04 28 22 025 00 90	connection	2.00	14
3	09 18 40 118 90	sleeve	1.00	14
20	09 14 10 148 90	seal	2.00	14
14	09 24 03 069 90	nipple	1.00	14
27	90 31 20 087 00-00	plug	1.00	26
12	09 21 34 080-00	nipple	1.00	26
22	09 24 04 298 90	nut	1.00	14
4	09 31 11 058 90	pin	1.00	14
33	09 14 03 107 90	seal	1.00	14
30	09 20 93 051 90	holder	2.00	14
21	90 15 05 039 00 90	cartridge	1.00	14
35	09 14 10 018 90	seal	1.00	14
34	09 14 10 084 90	seal	1.00	14
28	09 14 10 139 90	seal	2.00	14
5	09 31 11 040 90	pin	3.00	14
17	04 31 20 034 00 90	plug	2.00	14
19	09 20 71 031-00	handle	1.00	26
8	09 24 03 130-00	nipple	1.00	26
23	09 14 10 037 90	seal	1.00	14
32	09 27 71 011-00	rosette	1.00	26
25	09 20 67 014-00	handle	1.00	26
18	90 11 70 008 00-00	spout	1.00	26
24	09 28 30 036-00	cover	1.00	26
16	90 14 20 026 00 90	seal	1.00	14
13	90 14 10 033 00 90	seal	1.00	14
11	90 14 10 055 00 90	seal	1.00	14
7	90 14 10 010 00 90	seal	2.00	14
15	90 21 02 069 00-00	cover	1.00	26
6	90 23 01 141 00 90	back-flow preventer	1.00	14
26	90 31 11 030 00 90	pin	1.00	14
1	90 12 11 140 41-00	shower	1.00	26