COYA Single-lever tub mixer with stand pipe for freestanding installation with hand shower set - Chrome

COYA

25 863 404 Product version from 1/1/2026



- Spout: Round aerated stream
- Water flow rate limited to max. 6.5 gpm
- Hand-held shower: COMPACT RAIN, flow rate max. 1.8 gpm (at 3 bar)
- Baton hand shower with descaling system
- 11" Projection
- Swiveling spout 360°
- Integrated diverter
- Total height 40" - 42-3/4"
- Hand shower bracket
- Lower body height 22-1/4" - 25"
- Height to aerator/spout outlet 35-5/8" - 38-3/8"
- Flanges Ø 5-3/8"
- Metal shower hose 49-1/4" with anti-twist device

Internal backflow preventer.

NOTE: Local building codes may require the use of an anti-scald device. Please refer to remote pressure balance valve (35 914 970 90)

Internal backflow preventer.

NOTE: Local building codes may require the use of an anti-scald device. Please refer to remote pressure balance valve (35 914 970 90)

Chrome	25 863 404-00
Brushed Platinum	25 863 404-06
Dark Chrome	25 863 404-19
Brushed Durabrass (23kt Gold)	25 863 404-28
Brushed Dark Brass (PVD)	25 863 404-39
Brushed Bronze (PVD)	25 863 404-42
Brushed Dark Bronze (PVD)	25 863 404-43
Brushed Champagne (22kt Gold)	25 863 404-46
Champagne (22kt Gold)	25 863 404-47
Brushed Dark Platinum	25 863 404-99

Required article



Floor mounting rough set - 35 949 970-90
- Min. rough in depth 3-1/8"
- Max. rough in depth 5-7/8"

0010

COYA Single-lever tub mixer with stand pipe for freestanding installation with hand shower set - Chrome

25 863 404 Product version from 1/1/2026

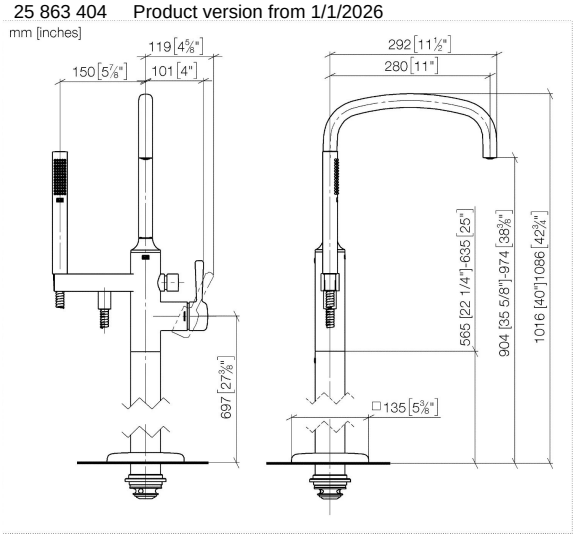

Flow rate chart

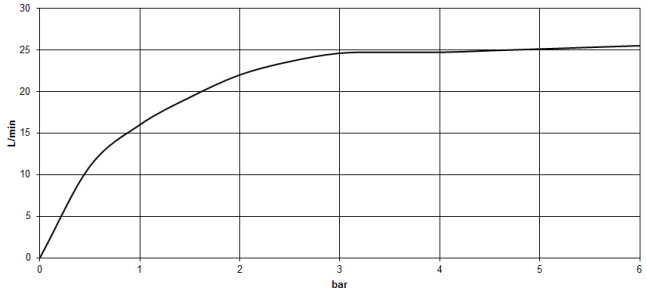

Codes & Standards

ASME A112.18.1	cUPC	EN 1717

COYA Single-lever tub mixer with stand pipe for freestanding installation with hand shower set - Chrome

25 863 404 Product version from 1/1/2026

Certificates and sustainability

Belgaqua_25-338-2	EPD-DOR-20230287 -IBA1-EN Environmental.product-declarat	IAPMO_4976 (

COYA Single-lever tub mixer with stand pipe for freestanding installation with hand shower set - Chrome

25 863 404 Product version from 1/1/2026

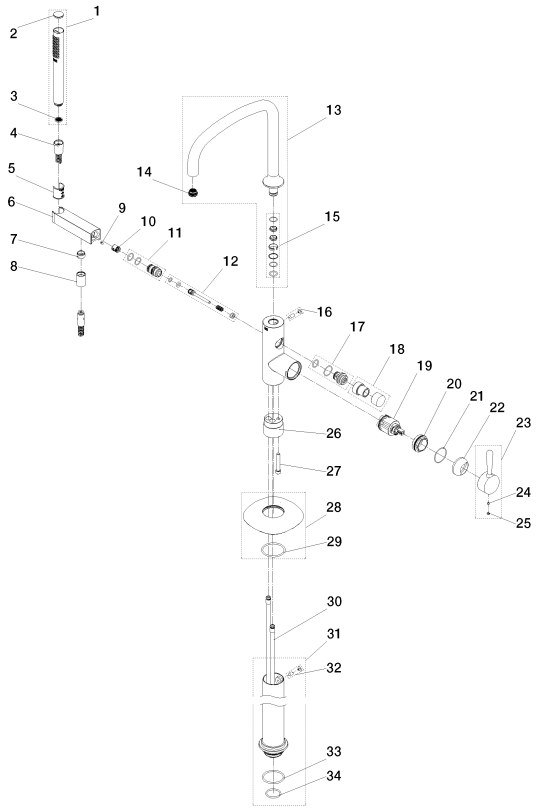

DORN BRACHT

COYA Single-lever tub mixer with stand pipe for freestanding installation with hand shower set - Chrome

25 863 404 Product version from 1/1/2026

Spare parts list

Number	Item Number	Designation	Number of units	Lead time
7	09 24 03 069 90	nipple	1.00	14
15	90 28 10 172 00 90	set	1.00	14
32	09 14 10 084 90	seal	1.00	14
22	09 28 30 036-00	cover	1.00	26
27	09 30 30 111 90	screw	1.00	14
23	90 20 40 005 00-00	handle	1.00	26
8	90 21 02 069 00-00	cover	1.00	26
16	04 31 20 036 00 90	plug	2.00	14
11	90 24 03 153 20 90	nipple	1.00	14
13	90 28 22 059 00-00	spout	1.00	26
20	09 24 04 298 90	nut	1.00	14
28	90 27 40 014 00-00	rosette	1.00	26
17	90 17 01 011 00 90	diverter	1.00	14
31	90 28 22 030 00-00	pipe	1.00	26
18	90 20 88 002 00-00	pull-rod	1.00	26
33	09 14 10 018 90	seal	1.00	14
9	09 31 11 058 90	pin	1.00	14
2	09 21 02 170-00	cap	1.00	26
14	09 29 03 124 90	aerator	1.00	14
1	90 12 11 140 41-00	shower	1.00	26
12	90 31 09 102 20 90	pull-rod	1.00	14
30	04 28 22 025 00 90	connection	2.00	14
24	90 31 11 030 00 90	pin	1.00	14
21	09 14 10 190 90	seal	1.00	14
25	90 31 20 087 00-00	plug	1.00	26
5	09 18 40 118 90	sleeve	1.00	14
19	90 15 05 039 00 90	cartridge	1.00	14
3	09 23 01 039 90	sieve	1.00	14
4	90 30 02 072 00-00	Metal shower hose 1/2" x 3/8" x 49-1/4" - Chrome	1.00	26
10	90 23 01 141 00 90	back-flow preventer	1.00	14
29	90 14 10 129 00 90	seal	1.00	14
6	09 17 20 047-00	holder	1.00	26
26	09 24 03 152 20-00	adaptor	1.00	82

Model/program/technical modifications and error excepted
For more information see: www.dornbracht.com + 49 (0) 2371 8899 900 mail@dornbracht.com