META Single-lever lavatory mixer with stand pipe without drain - Chrome

META

22 584 661 Product version from 5/1/2022



- 8" Projection
- Round aerated stream
- Total height 47-1/8" - 49-7/8"
- Height to water exit point 43-1/4"
- Flange diameter 5-3/8"
- Water flow rate limited to max. 1.2 gpm
- lead-free
- This product can help a building meet the requirements of Green Building Rating Systems, e.g. LEED®, BREEAM®, DGNB
- Swiveling spout

(ADA)

(ADA)

Chrome	22 584 661-00 0010
Brushed Platinum	22 584 661-06 0010
Light Gold (PVD)	22 584 661-26 0010
Brushed Light Gold (PVD)	22 584 661-27 0010
Matte Black	22 584 661-33 0010
Brushed Gold (PVD)	22 584 661-37 0010
Brushed Dark Brass (PVD)	22 584 661-39 0010
Brushed Bronze (PVD)	22 584 661-42 0010
Brushed Dark Bronze (PVD)	22 584 661-43 0010
Brushed Chrome	22 584 661-93 0010
Brushed Dark Platinum	22 584 661-99 0010

Required article



Floor mounting rough set - 35 949 970-90 0010
●Max. rough in depth 5-7/8"
●Min. rough in depth 3-1/8"

META Single-lever lavatory mixer with stand pipe without drain - Chrome

22 584 661 Product version from 5/1/2022

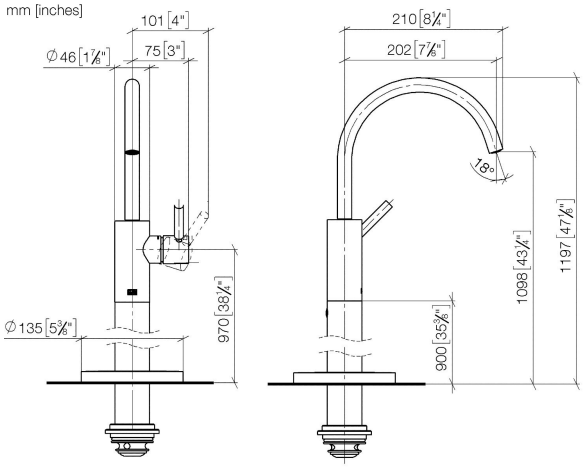

Codes & Standards

ADA	California Energy Commission (CEC)	EPA WaterSense	WaterSense

Certificates and sustainability

IAPMO_8834	EPD-DOR-20230287-IBA1-EN Environmental.product-declarat

META Single-lever lavatory mixer with stand pipe without drain - Chrome

22 584 661 Product version from 5/1/2022

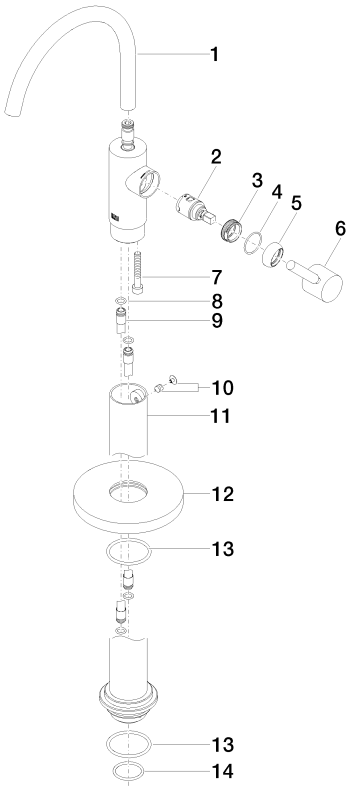

Spare parts list

Number	Item Number	Designation	Number of units	Lead time
5	09 28 30 021-00	cover	1.00	26
9	04 28 22 022 10 90	connection	2.00	14
3	09 24 04 266 90	nut	1.00	14
7	09 30 30 111 90	screw	1.00	14
14	09 14 10 018 90	seal	1.00	14
8	09 14 10 139 90	seal	2.00	14
4	09 14 10 091 90	seal	1.00	14
1	90 28 22 313 01-00	spout	1.00	26
12	09 27 88 005-00	rosette	1.00	82
6	90 20 66 003 00-00	handle	1.00	26
13	09 14 10 084 90	seal	2.00	14
2	90 15 05 042 00 90	cartridge	1.00	14
10	04 31 11 002 00 90	pin	1.00	14
11	90 28 22 574 00-00	pipe	1.00	26