DORN BRACHT

Three-hole lavatory mixer without drain

COYA

20 713 424 Product version from 1/1/2026



- 6-1/2" Projection
- Rigid spout
- Round aerated stream
- Total height 10-3/8"
- Height to aerator/spout outlet 6-3/4"
- Valve hole diameter 1-1/4"
- Spout hole diameter 1-3/8"
- Flange 2-3/8" x 2-3/8"
- Water flow rate limited to max. 1.2 gpm
- lead-free
- This product can help a building meet the requirements of Green Building Rating Systems, e.g. LEED®, BREEAM®, DGNB

Chrome	20 713 424-00 0010
Brushed Platinum	20 713 424-06 0010
Dark Chrome	20 713 424-19 0010
Brushed Durabrass (23kt Gold)	20 713 424-28 0010
Brushed Dark Brass (PVD)	20 713 424-39 0010
Brushed Bronze (PVD)	20 713 424-42 0010
Brushed Dark Bronze (PVD)	20 713 424-43 0010
Brushed Champagne (22kt Gold)	20 713 424-46 0010
Champagne (22kt Gold)	20 713 424-47 0010
Brushed Dark Platinum	20 713 424-99 0010

DORN BRACHT

Three-hole lavatory mixer without drain

COYA

20 713 424 Product version from 1/1/2026

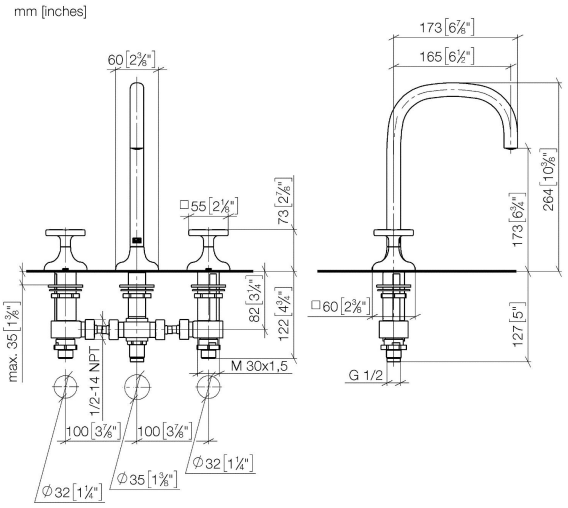

Codes & Standards

ASME A112.18.1	cUPC	EPA WaterSense	NSF372
NSF61	WaterSense		

Certificates and sustainability

IAPMO_N-4976	IAPMO_6397	EPD-DOR-20230287 -IBA1-EN Environmental.product-declarat	IAPMO_4976 (	IAPMO_8834

Three-hole lavatory mixer without drain

COYA

20 713 424 Product version from 1/1/2026

Parts for other finishes can be found here: Brushed Platinum

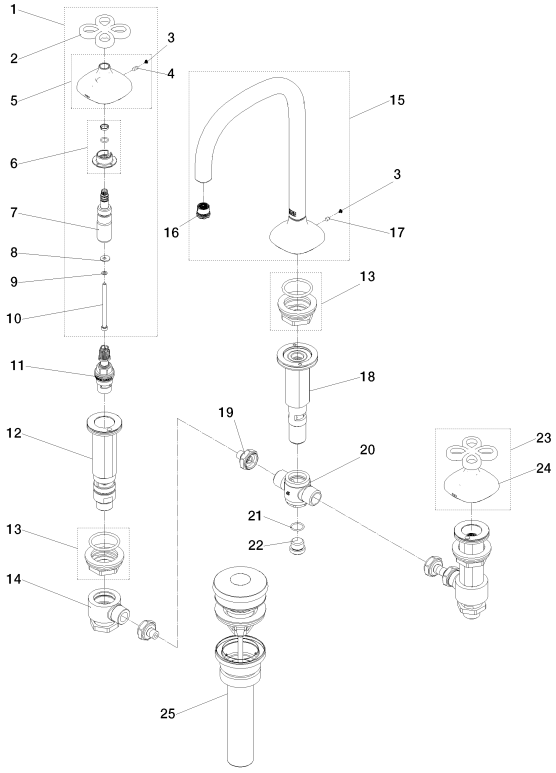

DORN BRACHT

Three-hole lavatory mixer without drain

COYA

20 713 424 Product version from 1/1/2026

Spare parts list

Number	Item Number	Designation	Number of units	Lead time
11	90 90 03 153 00 90	top	2.00	14
25	90 11 01 039 01-00	pop-up waste	1.00	26
5	90 27 40 004 01-00	rosette	1.00	26
7	90 29 06 010 00 90	spindle	2.00	14
13	04 23 10 032 78 90	fixing set	3.00	14
12	04 17 11 058 53 90	side panel	2.00	14
4	09 31 11 048 90	pin	2.00	14
18	90 30 01 501 00 90	shaft	1.00	14
21	09 14 10 017 90	seal	1.00	14
2	90 20 40 010 00-00	handle	2.00	26
22	09 24 04 021 10 90	nipple	1.00	14
23	90 20 40 010 04-00	handle	1.00	26
8	90 30 11 006 00 90	disc	2.00	14
6	90 14 15 005 00 90	ring	2.00	14
14	04 17 11 023 10 90	distributor	2.00	14
9	09 30 11 194 90	disc	2.00	14
15	90 28 22 466 00-00	spout	1.00	26
24	90 27 40 005 00-00	rosette	1.00	26
17	90 31 11 007 00 90	pin	1.00	14
20	90 17 11 020 10 90	distributor	1.00	14
10	90 30 30 254 00 90	screw	2.00	14
3	90 31 11 118 00 90	set	1.00	14
16	09 29 03 125 90	aerator	1.00	14
19	04 30 04 096 00 90	hose	4.00	14
1	90 20 40 010 03-00	handle	1.00	26