DORN BRACHT

COYA Three-hole lavatory mixer without drain - Chrome

COYA

20 713 414 Product version from 1/1/2026



- 6-1/2" Projection
- Rigid spout
- Round aerated stream
- Total height 10-3/8"
- Height to aerator/spout outlet 6-3/4"
- Valve hole diameter 1-1/4"
- Spout hole diameter 1-3/8"
- Flange 2-3/8" x 2-3/8"
- Water flow rate limited to max. 1.2 gpm
- lead-free
- This product can help a building meet the requirements of Green Building Rating Systems, e.g. LEED®, BREEAM®, DGNB

(ADA)

Chrome	20 713 414-00 0010
Brushed Platinum	20 713 414-06 0010
Dark Chrome	20 713 414-19 0010
Brushed Durabrass (23kt Gold)	20 713 414-28 0010
Brushed Dark Brass (PVD)	20 713 414-39 0010
Brushed Bronze (PVD)	20 713 414-42 0010
Brushed Dark Bronze (PVD)	20 713 414-43 0010
Brushed Champagne (22kt Gold)	20 713 414-46 0010
Champagne (22kt Gold)	20 713 414-47 0010
Brushed Dark Platinum	20 713 414-99 0010

DORN BRACHT

COYA Three-hole lavatory mixer without drain - Chrome

COYA

20 713 414 Product version from 1/1/2026

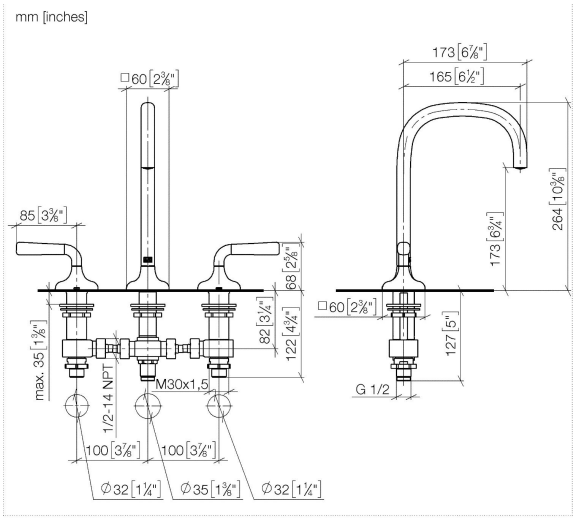

Codes & Standards

ASME A112.18.1	cUPC	EPA WaterSense	NSF372
NSF61	WaterSense		

Certificates and sustainability

IAPMO_N-4976	IAPMO_6397	EPD-DOR-20230287 -IBA1-EN Environmental.product-declarat	IAPMO_4976 (	IAPMO_8834

DORN BRACHT

COYA Three-hole lavatory mixer without drain - Chrome

20 713 414 Product version from 1/1/2026

Parts for other finishes can be found here: Brushed Platinum

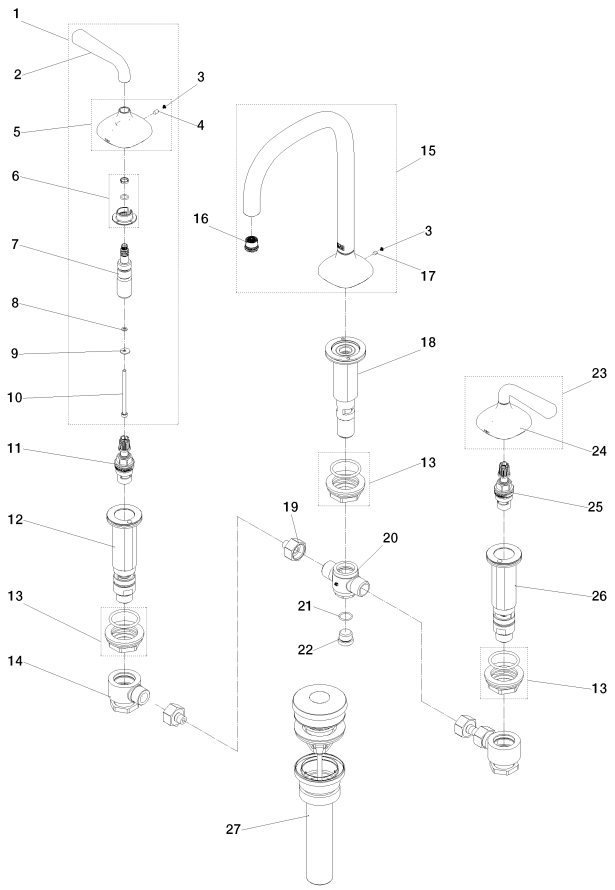

DORN BRACHT

COYA Three-hole lavatory mixer without drain - Chrome

20 713 414 Product version from 1/1/2026

Spare parts list

Number	Item Number	Designation	Number of units	Lead time
25	90 90 03 153 00 90	top	1.00	14
24	90 27 40 005 00-00	rosette	1.00	26
3	90 31 11 118 00 90	set	1.00	14
19	04 30 04 096 00 90	hose	2.00	14
15	90 28 22 467 00-00	spout	1.00	26
4	09 31 11 048 90	pin	2.00	14
23	90 20 40 001 06-00	handle (cold)	1.00	26
11	90 90 03 152 00 90	top	1.00	14
17	90 31 11 007 00 90	pin	1.00	14
8	09 30 11 194 90	disc	2.00	14
12	04 17 11 058 53 90	side panel	1.00	14
27	90 11 01 039 01-00	pop-up waste	1.00	26
13	04 23 10 032 78 90	fixing set	3.00	14
26	04 17 11 058 52 90	side panel	1.00	14
22	09 24 04 021 10 90	nipple	1.00	14
1	90 20 40 001 05-00	handle (hot)	1.00	26
9	90 30 11 006 00 90	disc	2.00	14
21	09 14 10 017 90	seal	1.00	14
14	04 17 11 023 10 90	distributor	2.00	14
18	90 30 01 501 00 90	shaft	1.00	14
6	90 14 15 005 00 90	ring	2.00	14
5	90 27 40 004 01-00	rosette	1.00	26
20	90 17 11 020 10 90	distributor	1.00	14
2	90 20 40 001 02-00	handle	2.00	26
10	90 30 30 254 00 90	screw	2.00	14
16	09 29 03 125 90	aerator	1.00	14
7	90 29 06 010 00 90	spindle	2.00	14