TARA Three-hole lavatory mixer with drain - Chrome

TARA

20 705 882 Product version from 4/1/2024



- 6-1/2" Projection
- US drain with overflow
- Swiveling spout 360°
- Round aerated stream
- Total height 5-3/4"
- Height to aerator/spout outlet 2-1/2"
- Valve hole diameter 1-1/4"
- Spout hole diameter 1-3/8"
- Flange diameter 2-1/8"
- 2x 3/8" flexible supply lines
- Water flow rate limited to max. 1.2 gpm
- lead-free
- This product can help a building meet the requirements of Green Building Rating Systems, e.g. LEED®, BREEAM®, DGNB

Suitable only for basins with overflow.

(ADA)

Chrome	20 705 882-00 0010
Brushed Platinum	20 705 882-06 0010
Platinum	20 705 882-08 0010
Dark Chrome	20 705 882-19 0010
Brushed Durabrass (23kt Gold)	20 705 882-28 0010
Matte Black	20 705 882-33 0010
Brushed Dark Brass (PVD)	20 705 882-39 0010
Brushed Bronze (PVD)	20 705 882-42 0010
Brushed Dark Bronze (PVD)	20 705 882-43 0010
Brushed Champagne (22kt Gold)	20 705 882-46 0010
Champagne (22kt Gold)	20 705 882-47 0010
Brushed Chrome	20 705 882-93 0010
Brushed Dark Platinum	20 705 882-99 0010

TARA Three-hole lavatory mixer with drain - Chrome

20 705 882 Product version from 4/1/2024

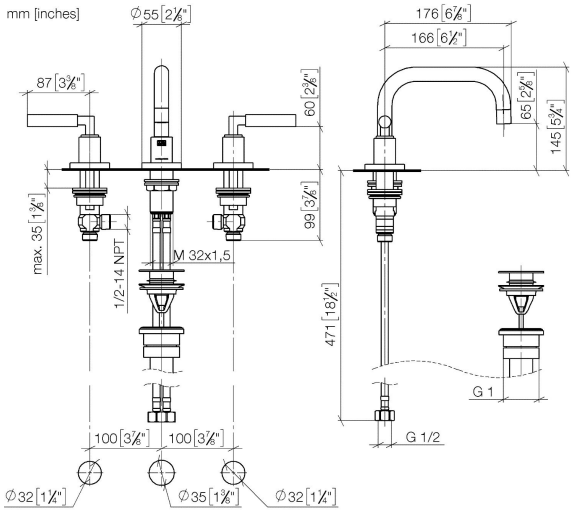

Codes & Standards

ADA	ASME A112.18.1	California Energy Commission (CEC)	cUPC
EPA WaterSense	NSF372	NSF61	WaterSense

Certificates and sustainability

IAPMO_N-4	IAPMO_8834	IAPMO_4976	IAPMO_6	EPD-DOR-20230287-IBA1-EN Environmental.product-declarat

TARA Three-hole lavatory mixer with drain - Chrome

20 705 882 Product version from 4/1/2024

Parts for other finishes can be found here: Brushed Platinum

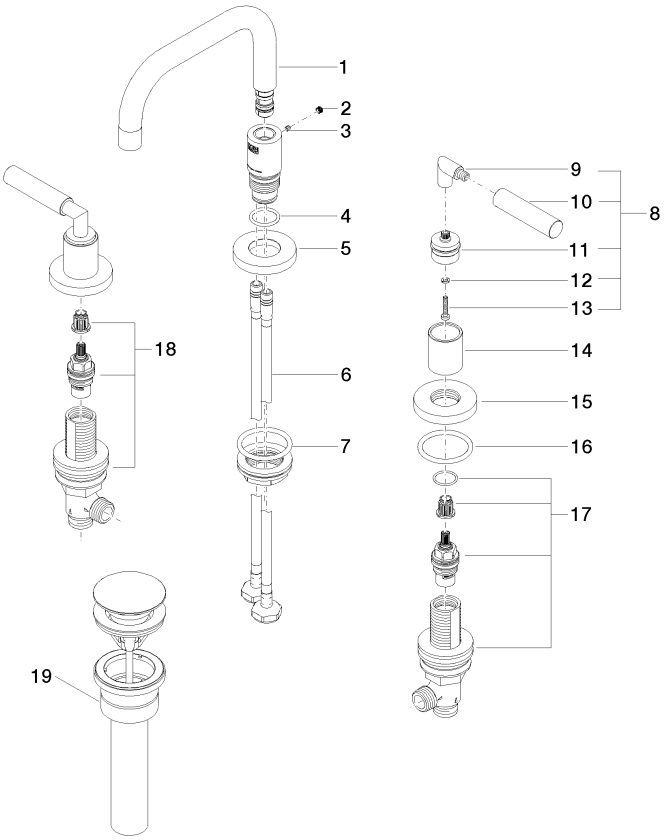

Spare parts list

Number	Item Number	Designation	Number of units	Lead time
3	09 31 11 099 90	pin	1.00	14
8	04 20 88 052 10-00	handle	2.00	26
4	09 14 10 015 90	seal	1.00	14
10	09 20 88 052-00	handle	2.00	26
17	90 17 11 040 50 90	side panel	1.00	14
11	90 12 12 219 00-00	base	2.00	26
7	04 23 10 009 02 90	fixing set	1.00	14
18	90 17 11 040 51 90	side panel	1.00	14
9	04 18 20 022 00-00	angle	2.00	26
15	09 27 89 105-00	rosette	2.00	26
1	90 28 22 370 01-00	spout	1.00	26
6	04 30 04 019 00 90	hose	2.00	14
19	10 125 970-00 0010	Umbrella drain 1 1/4" - Chrome	1.00	14
14	09 21 02 140-00	sleeve	2.00	26
5	09 28 10 140-00	ring	1.00	26
13	90 30 30 075 00 90	screw	2.00	14
16	90 14 10 043 00 90	seal	2.00	14
2	90 31 20 109 00 90	plug	1.00	14
12	90 30 11 029 00 90	disc	2.00	14