CL.1 Deck valve counter-clockwise closing hot - Chrome

20 000 706 Product version from 3/9/2015



- Valve hole diameter 1-1/4"
- Flange 2-3/8" x 2-3/8"
- with marking for hot

(ADA)

Chrome	20 000 706-00
Brushed Platinum	20 000 706-06
Dark Chrome	20 000 706-19
Brushed Champagne (22kt Gold)	20 000 706-46
Champagne (22kt Gold)	20 000 706-47
Brushed Dark Platinum	20 000 706-99

CL.1 Deck valve counter-clockwise closing hot - Chrome

20 000 706 Product version from 3/9/2015

mm [inches]

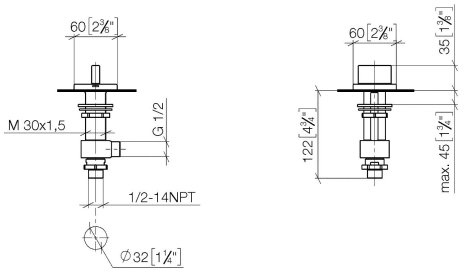

Flow rate chart

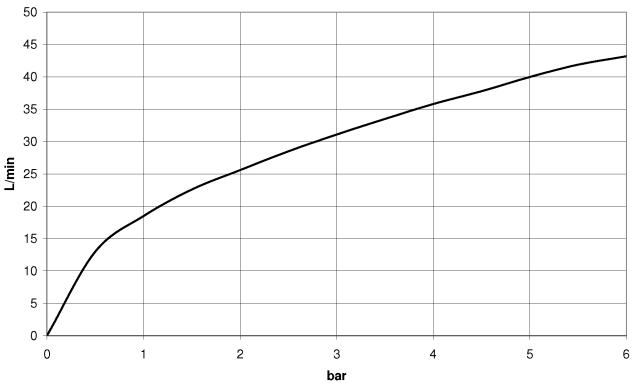

Codes & Standards

ADA	ASME A112.18.1	cUPC	DIN 4109
ISO 3822	Scottish Water Byelaws	UK Water Supply Regulations	Ü-Zeichen

CL.1 Deck valve counter-clockwise closing hot - Chrome

20 000 706 Product version from 3/9/2015

Certificates and sustainability

IAPMO_4976	WRAS_2103	LGA_28	EPD-DOR-20230287-IBA1-EN Environmental.product-declarat

CL.1 Deck valve counter-clockwise closing hot - Chrome

20 000 706 Product version from 3/9/2015

Parts for other finishes can be found here: Brushed Platinum

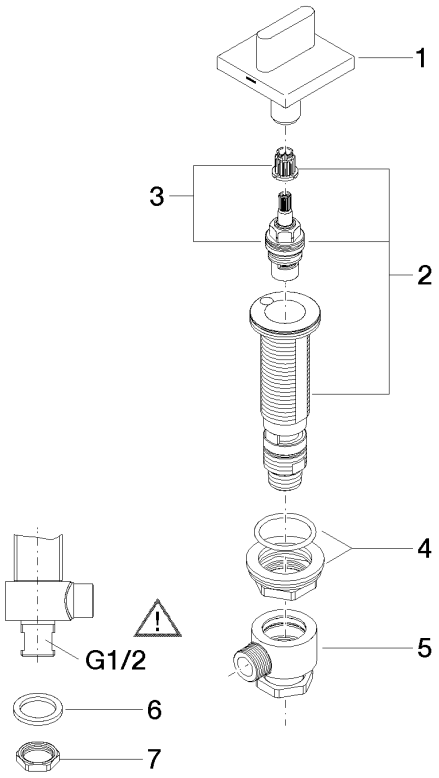

Spare parts list

Number	Item Number	Designation	Number of units	Lead time
5	04 17 11 023 10 90	distributor	1.00	14
2	04 17 11 058 32 90	side panel	1.00	14
3	90 90 03 132 00 90	top	1.00	14
8	09 23 10 012 90	nut	1.00	14
7	09 30 11 059 90	disc	1.00	14
4	04 23 10 032 78 90	fixing set	1.00	14
1	90 20 70 051 05-00	handle (hot)	1.00	26
6	90 23 30 040 00-00	threaded connector	1.00	26