# IMO Lavatory spout, wall-mounted without drain - Chrome

IMO

13 800 671 Product version from 4/1/2024



- 6-3/4" Projection
- Rigid spout
- Rectangular aerated stream
- 1-5/8" hole diameter
- Flange 3-1/8" x 2-3/8"
- 1/2" connection
- Water flow rate limited to max. 1.2 gpm
- lead-free
- This product can help a building meet the requirements of Green Building Rating Systems, e.g. LEED®, BREEAM®, DGNB

| | |
|---|---|
| Chrome | 13 800 671-00 0010 |
| Brushed Light Gold (PVD) | 13 800 671-27 0010 |
| Brushed Gold (PVD) | 13 800 671-37 0010 |
| Brushed Chrome | 13 800 671-93 0010 |

13 800 671 Product version from 4/1/2024

## Codes & Standards

| | | |
|---|---|---|
| ASME A112.18.1 | cUPC | NSF61 |

## Certificates and sustainability

| | | |
|---|---|---|
| IAPMO_N-4 | IAPMO_4976 | EPD-DOR-20230287-IBA1-EN Environmental.product-declarat |

# IMO Lavatory spout, wall-mounted without drain - Chrome



13 800 671 Product version from 4/1/2024

Parts for other finishes can be found here: Brushed Light Gold (PVD)

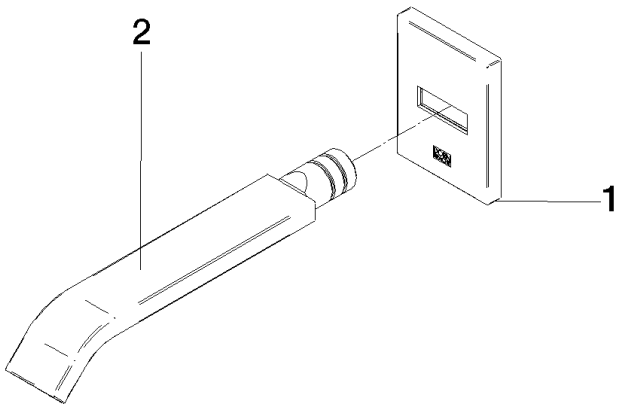


## Spare parts list

| Number | Item Number | Designation | Number of units | Lead time |
|---|---|---|---|---|
| 2 | 90 28 22 413 00-00 | spout | 1.00 | 26 |
| 1 | 90 27 67 023 00-00 | rosette | 1.00 | 26 |