MEM Tub spout without diverter for freestanding installation - Chrome

MEM

13 672 780 Product version from 9/30/2005



- 11" Projection
- Cascade
- Total height 32-5/8" - 35-3/8"
- Height to aerator/spout outlet 26-1/8" - 28-7/8"
- Flange 5-1/8" x 5-1/8"
- Water flow rate limited to max. 12.6 gpm

Chrome	13 672 780-00
Brushed Platinum	13 672 780-06
Platinum	13 672 780-08
Dark Chrome	13 672 780-19
Brushed Durabrass (23kt Gold)	13 672 780-28
Brushed Dark Brass (PVD)	13 672 780-39
Brushed Bronze (PVD)	13 672 780-42
Brushed Dark Bronze (PVD)	13 672 780-43
Brushed Champagne (22kt Gold)	13 672 780-46
Champagne (22kt Gold)	13 672 780-47

DORN BRACHT

MEM Tub spout without diverter for freestanding installation - Chrome

MEM

13 672 780 Product version from 9/30/2005

mm [inches]

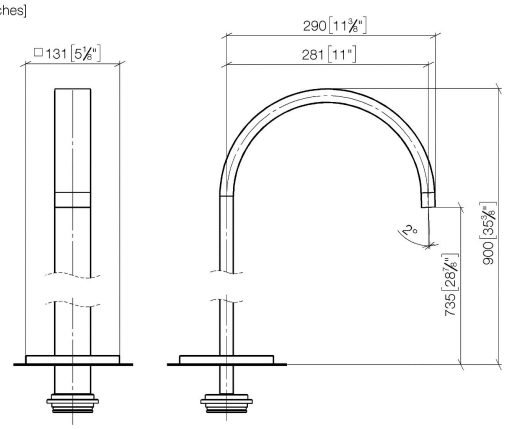

Flow rate chart

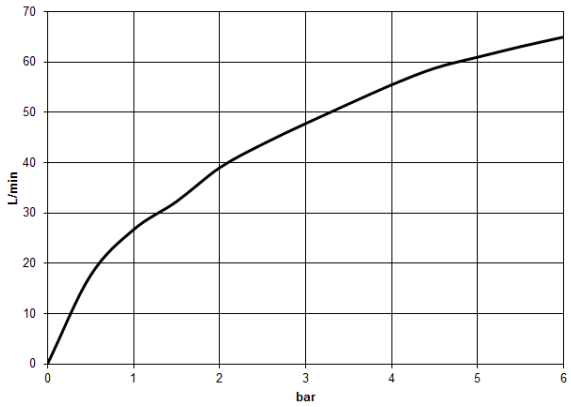

Codes & Standards

ASME A112.18.1	cUPC	DIN 4109	ISO 3822
Scottish Water Byelaws	UK Water Supply Regulations	Ü-Zeichen	

Certificates and sustainability

IAPMO_4976	LGA_18	EPD-DOR-20230287 -IBA1-EN Environmental.product-declarat
		WRAS_250602

MEM Tub spout without diverter for freestanding installation - Chrome

13 672 780 Product version from 9/30/2005

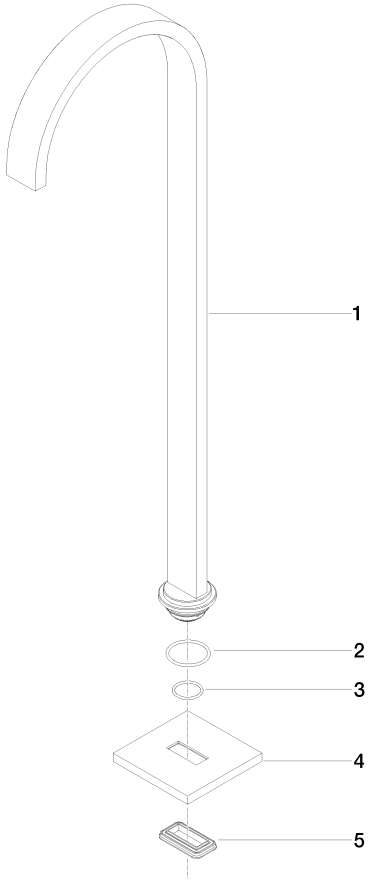

Spare parts list

Number	Item Number	Designation	Number of units	Lead time
5	09 14 03 106 90	seal	1.00	14
2	09 14 10 084 90	seal	1.00	14
1	04 28 22 183 00-00	spout	1.00	82
4	09 27 78 022-00	rosette	1.00	26
3	09 14 10 018 90	seal	1.00	14