Flush plate For Geberit flush-mounted tanks , angular - Chrome

SERIES SPECIFIC

12 665 980 Product version from 4/1/2024



Fits: MEM, CL.1

- Cover plate 6-5/8" x 9-5/8" x 1/2"
- Mechanical flush plate with manual activation
- For dual flush systems
- Incl. mounting frame, actuator rods and mounting elements
- Sound-insulated push rods, quickly adjustable without tools
- Compatible with all tanks in the Geberit Sigma series from 2001 onwards

Not compatible with GEBERIT Duo Fresh module

Chrome	12 665 980-00
Brushed Platinum	12 665 980-06
Platinum	12 665 980-08
Durabrass (23kt Gold)	12 665 980-09
Dark Chrome	12 665 980-19
Light Gold (PVD)	12 665 980-26
Brushed Light Gold (PVD)	12 665 980-27
Brushed Durabrass (23kt Gold)	12 665 980-28
Matte Black	12 665 980-33
Brushed Dark Brass (PVD)	12 665 980-39
Brushed Bronze (PVD)	12 665 980-42
Brushed Dark Bronze (PVD)	12 665 980-43
Brushed Champagne (22kt Gold)	12 665 980-46
Champagne (22kt Gold)	12 665 980-47
Brushed Chrome	12 665 980-93
Brushed Dark Platinum	12 665 980-99

DORN BRACHT

Flush plate For Geberit flush-mounted tanks , angular - Chrome

SERIES SPECIFIC

12 665 980 Product version from 4/1/2024

mm [inches]

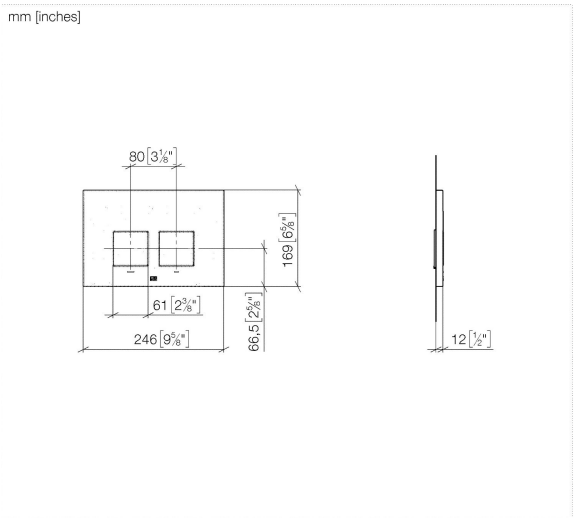

Flush plate For Geberit flush-mounted tanks , angular - Chrome

SERIES SPECIFIC

12 665 980 Product version from 4/1/2024

Parts for other finishes can be found here: Brushed Platinum

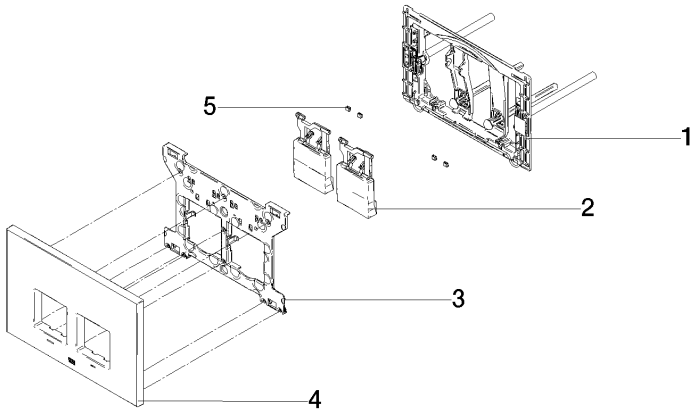

Spare parts list

Number	Item Number	Designation	Number of units	Lead time
1	90 28 01 030 00 90	base	1.00	14
3	90 28 10 212 00 90	base	2.00	14
4	90 11 98 012 00-00	cover	4.00	26
2	90 20 98 000 00-00	button	2.00	26
5	90 14 05 090 00 90	ring	1.00	14