Flush plate For Geberit flush-mounted tanks round - Chrome

SERIES SPECIFIC

12 665 979 Product version from 4/1/2024



Fits: IMO, LULU, MADISON, TARA, LISSÉ, VAIA, META, CYO, COYA

- Cover plate 6-5/8" x 9-5/8" x 1/2"
- Mechanical flush plate with manual activation
- For dual flush systems
- Incl. mounting frame, actuator rods and mounting elements
- Sound-insulated push rods, quickly adjustable without tools
- Compatible with all tanks in the Geberit Sigma series from 2001 onwards

Not compatible with GEBERIT Duo Fresh module

Chrome	12 665 979-00
Brushed Platinum	12 665 979-06
Platinum	12 665 979-08
Durabrass (23kt Gold)	12 665 979-09
Dark Chrome	12 665 979-19
Light Gold (PVD)	12 665 979-26
Brushed Light Gold (PVD)	12 665 979-27
Brushed Durabrass (23kt Gold)	12 665 979-28
Matte Black	12 665 979-33
Brushed Gold (PVD)	12 665 979-37
Brushed Dark Brass (PVD)	12 665 979-39
Brushed Bronze (PVD)	12 665 979-42
Brushed Dark Bronze (PVD)	12 665 979-43
Brushed Champagne (22kt Gold)	12 665 979-46
Champagne (22kt Gold)	12 665 979-47
Brushed Chrome	12 665 979-93
Brushed Dark Platinum	12 665 979-99

Flush plate For Geberit flush-mounted tanks round - Chrome

SERIES SPECIFIC

12 665 979 Product version from 4/1/2024

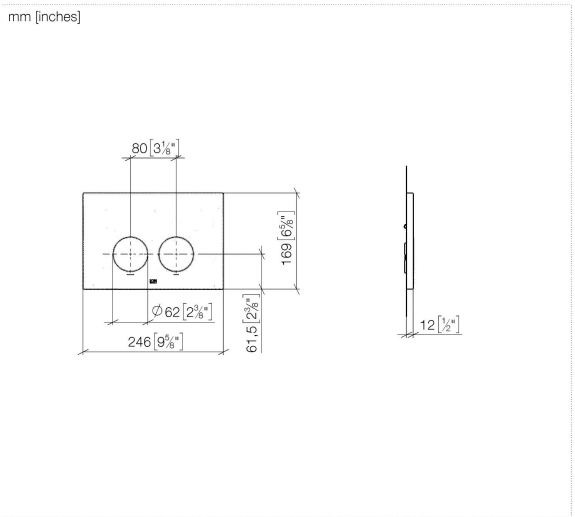

Flush plate For Geberit flush-mounted tanks round - Chrome

SERIES SPECIFIC

12 665 979 Product version from 4/1/2024

Parts for other finishes can be found here: Brushed Platinum

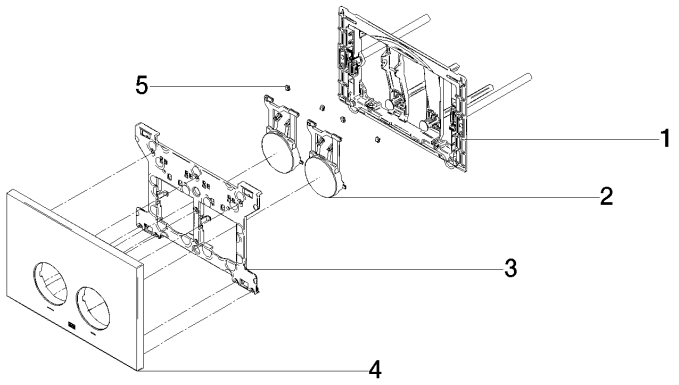

Spare parts list

Number	Item Number	Designation	Number of units	Lead time
4	90 11 97 012 00-00	cover	1.00	26
2	90 20 97 100 00-00	button	1.00	26
1	90 28 01 030 00 90	base	1.00	14
3	90 28 10 212 00 90	base	1.00	14
5	90 14 05 090 00 90	ring	1.00	14