G-12182PV-**

PANTHEON Series

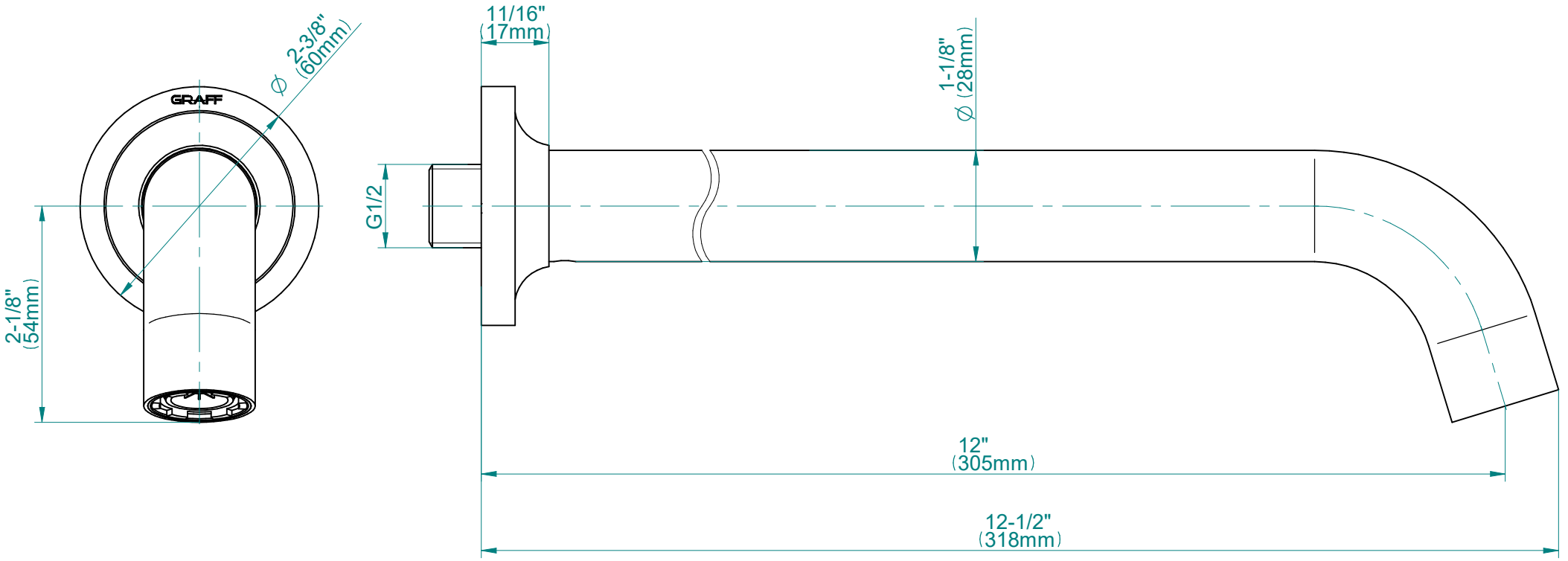

GRAFF®
Art of Bath