Pantheon Collection
G-8527RP
12" Shower Arm

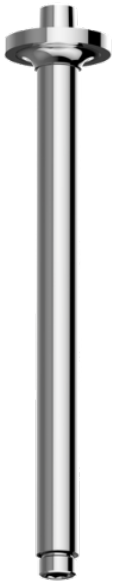

Product Features

- Includes arm and round flange
- 1/2" NPT male thread inlet
- For use with all showerheads

Available Finishes

Polished Chrome
Matte White
Polished Nickel
Polished Nickel PVD®
Steelnox® (Satin Nickel)
Brushed Nickel
Brushed Nickel PVD®
Polished Champagne PVD®
Brushed Champagne PVD®
Polished Gold PVD®
Brushed Gold PVD®
Polished Brass PVD®
Brushed Brass PVD®
24K Polished Gold
24K Brushed Gold
Satin Gold PVD®
Warm Bronze PVD®
Polished Rose Gold / Polished Copper PVD®
Brushed Rose Gold / Brushed Copper PVD®
Polished Tuscan Bronze PVD®
Brushed Tuscan Bronze PVD®
Vintage Brushed Brass
Olive Bronze
Onyx PVD®
Brushed Onyx PVD®
Architectural Black™
Matte Black
Brushed Brass PVD® / Onyx PVD® Accents
Polished Tuscan Bronze PVD® / Brushed Gold PVD® Accents
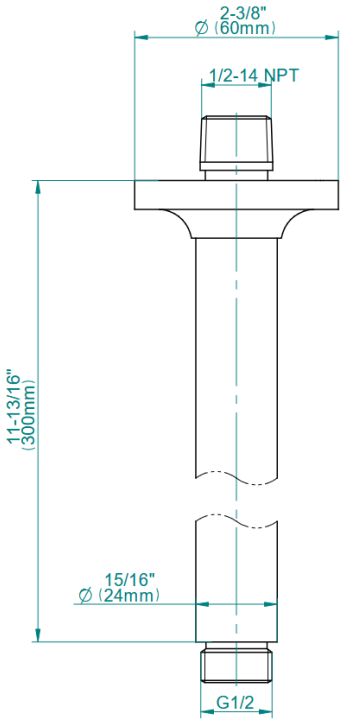
Pantheon Collection
G-8527RP
12" Shower Arm